AGENDA

WEDNESDAY, DECEMBER 13, 2023

REGULAR MEETING
PLANNING COMMISSION
CITY OF YUBA CITY

6:00 P.M. – REGULAR MEETING

CHAIRPERSON	• Jackie Sillman
VICE CHAIRPERSON	• Stacy Brookman
COMMISSIONER	• James Nore
COMMISSIONER	• Rupinder Johl Sandhu
COMMISSIONER	• Justine Gill
COMMISSIONER	• Bhavin Singh Dale
COMMISSIONER	• Karri Campbell (Sutter Co. Rep)

1201 Civic Center Blvd
Yuba City, CA 95993

Wheelchair Accessible

The City has adopted a Reasonable Accommodations Policy that provides a procedure for receiving and resolving requests for accommodation to participate in this meeting. Please visit yubacity.net ADA & Accessibility Resources page. If you need assistance in order to attend the Planning Commission meeting, or if you require auxiliary aids or services, e.g., hearing aids or signing services to make a presentation to the Planning Commission, the City is happy to help. Accommodations should be requested as early as possible as additional time may be required in order to provide the requested accommodation; 72 hours in advance is suggested. Please contact City offices at (530) 822-4817 or ***(TTY: 530-822-4732),*** *so such aids or services can be arranged. Requests may also be made by email at cityclerk@yubacity.net or citymanager@yubacity.net or mail City Clerk, 1201 Civic Center Blvd, Yuba City, CA 95993.*

AGENDA
PLANNING COMMISSION
CITY OF YUBA CITY
DECEMBER 13, 2023
6:00 P.M. - REGULAR MEETING

Materials related to an item on this Agenda, submitted to the Commission after distribution of the agenda packet, are available for public inspection at City Hall at 1201 Civic Center Blvd., Yuba City, during normal business hours. Such documents are also available on the City of Yuba City's website at www.yubacity.net, subject to staff's availability to post the documents before the meeting.

Emailed comments sent to developmentservices@yubacity.net at least 24 hours before the meeting will be distributed to the Planning Commission prior to the meeting. Please identify the Agenda item(s) addressed by the comments.

Call to Order

Roll Call:

_____ Chairperson Sillman
_____ Vice Chairperson Brookman
_____ Commissioner Nore
_____ Commissioner Sandhu
_____ Commissioner Gill
_____ Commissioner Dale
_____ Commissioner Campbell (Sutter County Representative)

Pledge of Allegiance to the Flag

Public Comment on Items not on the Agenda

You are welcome and encouraged to participate in this meeting. Public comment on items not listed on the agenda will be heard at this time. Comments on controversial items may be limited and large groups are encouraged to select representatives to express the opinions of the group.

1. Written Requests

Members of the public submitting written requests, at least 24 hours prior to the meeting, will be normally allotted five minutes to speak.

2. Appearance of Interested Citizens

Members of the public may address the Planning Commission on items of interest that are within the City's jurisdiction. Individuals addressing general comments are encouraged to limit their statements to three minutes.

Planning Commission Business

3. Agenda Modifications

Approval of Minutes

4. Minutes from September 27, 2023

Business Items

5. Consideration of Use Permit 23-02 for construction of a 60-foot-high monopole cell tower and related ground equipment, located at 223 Clark Ave, the southeast corner of Clark Avenue and Clinton Street.

Recommendation: A. Conduct a Public Hearing and make the necessary findings to:

B. Adopt a resolution of the Planning Commission of the City of Yuba City approving Environmental Assessment 23-09 by adopting a mitigated negative declaration, subject to the proposed conditions of approval and mitigation measures, and approving Use Permit 23-02 for a 60-foot-high cell tower and related ground equipment on an approximately 1,000 square foot leased area. Located at 223 Clark Avenue (a portion of Assessor's Parcel Number 53-174-001).

6. Consideration of Zoning Code Amendment 23-01 to revise Section 8-5.6104 of the Yuba City Municipal Code regarding parking standards for boats, utility trailers and recreational vehicles in residential areas.

Recommendation: A. Conduct a Public Hearing and make the necessary findings to:

B. Adopt a resolution of the Planning Commission of the City of Yuba City recommending the City Council find the project is exempt from environmental review pursuant to CEQA Guidelines Section 15061 (b)(3) and recommend the City Council approve Zoning Code Amendment 23-01 to revise the parking standards for boats, utility trailers and recreational vehicles in residential area.

Miscellaneous Items

7. Future Agenda Items

8. Development Services Director Report

9. Report of Actions of the Yuba City Planning Commission/Sutter County Update

Adjournment

****

Persons dissatisfied with any decision of the Planning Commission may appeal such action to the City Council. Appeals, accompanied by a fee of $851.26, must be filed with the City Clerk, 1201 Civic Center Boulevard, Yuba City, CA 95993 within 10 days of such action. If no appeal is filed within this time limit, the Planning Commission action becomes final. The exception to this is rezone requests. Please check with the Planning Division, 1201 Civic Center Boulevard, Yuba City, CA 95993 for the procedure. Mailed notices of the Council hearings will be accomplished in the same manner as the Planning Commission hearings unless additional notice is deemed necessary.

PLANNING COMMISSION
CITY OF YUBA CITY
September 27, 2023
6:00 P.M. - REGULAR MEETING

Video link to full Planning Commission meeting:
https://youtu.be/P3Gb6XHvG28?si=Notj4Dasi5-Nh5F

Materials related to an item on this Agenda, submitted to the Commission after distribution of the agenda packet, are available for public inspection at City Hall at 1201 Civic Center Blvd., Yuba City, during normal business hours. Such documents are also available on the City of Yuba City's website at www.yubacity.net, subject to staff's availability to post the documents before the meeting.

Call to Order

Meeting called to order by Chairperson Sillman at 6:00 pm.

Roll Call:

Commissioners in attendance:

Chairperson Sillman
Vice Chairperson Brookman
Commissioner Gill
Commissioner Nore
Commissioner Sandhu
Commissioner Campbell (Sutter County Representative)

Commissioner Dale was absent (excused absence)

Pledge of Allegiance to the Flag was led by Vice Chair Brookman.

Public Comment on Items not on the Agenda

** Please note that the spelling of Public Commenters names is unknown. **

You are welcome and encouraged to participate in this meeting. Public comment on items not listed on the agenda will be heard at this time. Comments on controversial items may be limited and large groups are encouraged to select representatives to express the opinions of the group.

1. Written Requests

Members of the public submitting written requests, at least 24 hours prior to the meeting, will be normally allotted five minutes to speak.

There were no written requests received.

2. Appearance of Interested Citizens

Members of the public may address the Planning Commission on items of interest that are within the City's jurisdiction. Individuals addressing general comments are encouraged to limit their statements to three minutes.

Heather Esemann, Sanborn and Lincoln Rd, requested the city do more to facilitate electric vehicle charger development. She stated she felt the City Council dismissed her previous comments regarding electric vehicle chargers.

Planning Commission Business

3. Agenda Modifications

Chairperson Sillman requested approval of the agenda.

Motion by: Vice Chair Brookman
Second by: Commissioner Gill

Vote: The motion passed 6-0 with Commissioner Dale Absent

Approval of Minutes

4. Minutes from August 23, 2023

Chairperson Sillman requested approval of the minutes.

Motion by: Commissioner Gill
Second by: Commissioner Sandhu

Vote: The motion passed 6-0 with Commissioner Dale Absent

Business Items

5. Consideration of an 18-month time extension for Tentative Subdivision Map 19-02, West Sanborn Estates, located on the northwest corner of Bogue Road and Sanborn Road.

Item was called and Aaron Brown, Assistant Planner, gave a presentation.

Public Hearing:

Vice Chair Brookman asked if the project would be back before the Planning Commission for another 18-month time extension?

Ben Moody, Director of Public Works and Development Services, explained the reasoning for the applicant requesting the 3 years, and the parameters of the code limiting requests to 18 months each.

Heather Esemann, Sanborn and Lincoln Rd, asked if the delay is on the developer or the infrastructure?

Ben Moody responded that the action being taken tonight is the extension of the map, and the next step is the owner of the property, coordinating with the developer, to move forward with improvement plans. The City is not putting anything on hold.

Sean Minard, project representative, clarified that the current situation of the market is the hold up, not the infrastructure.

Chairperson Sillman closed the public hearing.

Commissioner Comments:

Commissioner Campbell Abstained from voting.

Motion by: Commissioner Gill
Second by: Commissioner Nore

Vote: The motion passed 5-0 with Commissioner Dale Absent, and Commissioner Campbell Abstaining

6. Tentative Parcel Map (TPM) 23-01 to create four parcels at 2930 Jefferson Avenue, Accessors Parcel Number 62-071-024.

Item was called and Aaron Brown, Assistant Planner, gave a presentation.

Commissioner Nore asked about the ingress, egress and utility easement involved in the project, and how the other properties that are currently using it would be affected.

Nikos Krohn, project applicant, responded that the property to the South of the project site, that currently uses the easement is a family member and is aware of the project.

Commissioner Nore asked if neighbors could join an HOA/Maintenance agreement.

Ben Moody responded yes it could be worked out amongst the owners, but it isn't a condition of the current project.

Nikos Krohn, project applicant, responded that he is open to discussing the easement/HOA with the property owners that will use the easement to the south of the project.

Public Hearing:

Heather Esemann, Sanborn and Lincoln Rd, commented on the water sewer connections, and that neighbors should have a reimbursement agreement.

Ben Moody, noted that the owner should reach out to the property owners that will use the easement to the south of the project and offer them the opportunity to hook into the water/sewer line connection during design review.

Chairperson Sillman closed the public hearing.

Motion by: Commissioner Sandhu
Second by: Vice Chair Brookman

Roll Call Vote:

Commissioner Nore - Yes
Commissioner Sandhu - Yes
Commissioner Gill - Yes
Commissioner Campbell - Yes
Vice Chairperson Brookman - Yes
Chairperson Sillman - Yes

Vote: The motion passed 6-0 with Commissioner Dale Absent

7. Tentative Subdivision Map (TSM) 22-02 and an associated Development Agreement (DA): Sohal Ranch Subdivision

Item was called and Doug Libby, Deputy Director of Development Services, gave a presentation.

A written comment was received from Patricia Carvo and distributed to the Planning Commission before the start of meeting.

Doug Libby responded to the written comment received by Ms. Carvo regarding traffic and clarified that no traffic light is proposed. He answered a question regarding the sewer line and responded that the neighbors would have a better opportunity to tie in to sewer and water, subject to payment of required connection fees. Additionally, he addressed a concern that the subdivision construction would impact a private wells and septic tanks and indicated that the construction wouldn't be deep enough to affect them.

Commissioner Campbell stated he believes the neighborhood park should be located on the corner of Lincoln and George Washington Blvd. He stated he believes the current placement is a detriment.

Commissioner Gill asked a question about the fair-share contribution of the future signalization at the intersection of Bogue and Sanborn roads.

Doug Libby explained that this is done through a traffic modeling exercise performed by a traffic engineer.

Ben Moody agreed with Doug and explained how the portion of money goes into the roads, and what that trigger point is.

Commissioner Sandhu asked why Harter was included in traffic analysis

Doug Libby explained how the project included a more focused traffic analysis and borrowed heavily from the EIR and the traffic model completed for the Lincoln East Specific Plan.

Chair Sillman explained how she agreed with Commissioner Campbell's park comment and asked if the park could be moved?

Commissioner Gill commented that the park location is due to the layout of the Lincoln East Specific Plan.

Public Hearing:

Sean Minard, project representative, commented that the purpose of this park is to be a neighborhood park, which is supposed to be local for the specific neighborhood.

Heather Esemann, Sanborn and Lincoln Rd, questioned why the development is occurring in this area, and that more compact development would be best. She mentioned that there is development in the path from the proposed location to the nearest school. She also mentioned that she wants to see bike lanes be incorporated.

Sean Minard, project representative, responded that you can only develop where you own the property. Regarding the timing/phasing of the park, he noted that the park is triggered by the 98th lot. He also explained the new sewer lift station, and that the goal is to eventually run sewer line down Harter Parkway and across Bogue Rd.

Commissioner Gill asked if the sewer line would not be continued on the northern portion of the property, as there was curiosity from a member of the public to connect to sewer.

Sean Minard, project representative, indicated that the sewer line would run along Lincoln Rd, and down Sohal Way. He mentioned the ability to connect, if neighbors were willing to pay a sewer connection fee.

Commissioner Nore asked if the southeast corner of the development by the park would be accessible to walk, or if there would be a fence.

Sean Minard, project representative, indicated the area will have curb, gutter, and sidewalk, as well as a trap fence.

Commissioner Sandhu asked if only two ingress/egress points would be enough for 173 homes.

Sean Minard, project representative, answered yes, it is sufficient for ingress/egress.

Commissioner Gill asked to confirm that Pasa Tiempo Dr. will connect with George Washington Blvd.

Sean Minard, project representative, indicated that there is plenty of distance to have turn pockets and avoid future traffic issues.

Ben Moody responded that the future connection is important with this project, and that this project will build/ and pay for its half of the roadway on George Washington Blvd.

Commissioner Gill asked about the timing of the installation of road improvements.

Ben Moody responded that it depends, and that the timing for phases can change.

Commissioner Gill asked if there would be any landscaping along frontages.

Sean Minard, project representative, answered yes, and pointed toward the typical road section that includes detached sidewalk and landscaping.

Commissioner Campbell stated that Shanghai Bend is the best example of a good park that we have, and that he stands by his concern regarding the proposed park location.

Terry Boyer, Lincoln Rd, asked for clarification on why only half of the road is going to be improved.

Doug Libby responded that developers are only obligated for their half of the street. He noted that the city will still maintain the north side of George Washington.

Ben Moody responded regarding frontage improvements, and explained that the volume of the project triggers the scope of the improvements needed. He continued that Developers are responsible to build half of the street and the development pays the Road impact fee for future improvements. Ultimately, 179 homes triggers frontage improvements, not the full four lanes.

Robert Boyer, 2875 Lincoln Rd, stated he would prefer to have the park built along George Washington Blvd.

Chairperson Sillman closed the public hearing.

Motion by: Vice Chair Brookman
Second by: Commissioner Sandhu

Roll Call Vote:

Commissioner Nore - Yes
Commissioner Sandhu - Yes
Commissioner Gill - Yes
Commissioner Campbell - No
Vice Chairperson Brookman - Yes
Chairperson Sillman - Yes

Vote: The motion passed 5-1 with Commissioner Dale Absent

8. General Plan Amendment (GPA) 23-03, Rezone (RZ) 23-03, Bains-Butte House.

Item was called and Doug Libby, Deputy Director of Development Services, gave a presentation.

Commissioner Comment:

Commissioner Gill asked if projects can be brought forward as just a standalone General Plan Amendment/Rezoning, or if a development plan should be proposed at the same time.

Doug Libby responded that yes, a project can be brought forward as a standalone General Plan Amendment/ Rezoning. He indicated that a previous project that included a development plan alongside the General Plan Amendment/Rezone was requested from a previous Planning Commission, potentially due to the scope of the project.

Commissioner Nore asked about the City's noticing process.

Doug Libby responded that the project is published in the newspaper for a 20-day public comment period, and mailed notice is sent to property owners within 300 feet of the project.

Public Comment:

No public comment was provided and Chairperson Sillman closed the public hearing.

Motion by: Commissioner Nore
Second by: Commissioner Campbell

Vote: The motion passed 6-0 with Commissioner Dale Absent

Miscellaneous Items

9. A Presentation on the City's New Permit Planner Software

Item was called and Ashley Potocnik, Development Liaison, gave a presentation.

Commissioner Comment:

Commissioner Campbell commented that he is amazed at how quick this software was implemented, and complemented Ashley, and other City Staff for their work.

Chairperson Sillman complimented Ashley's effort, and her "You Can" movement.

Commissioner Sandhu complimented the new software, and efforts.

Commissioner Nore asked if any outreach for the new software has been done, and how it was received by the public.

Ashley Potocnik responded yes, the new software got coverage in the newspaper, presented to City Council, as well as other service clubs.

10. Future Agenda Items

Deputy Development Services Director Doug Libby provided an update on the following items:

- October Planning Commission meetings will be cancelled.
- The November and December Planning Commission meetings will be held on the first meeting of the month, and the second meeting will be cancelled.

11. Development Services Director Report

Public Works and Development Services Director Ben Moody provided an update on the following items:

- Congratulations to Aaron on first presentation.

- An update on the Henson Family Apartments project.
- An update on housing construction by DR Horton in the Harter Specific Plan.
- Chick-Fil-A has expressed interest in potentially finding a location in Yuba City.

Commissioner Comments:

Chair Sillman asked about Henson Farms. What is the purpose of the workshop, and if the community doesn't like it, will anything be changed?

Ben Moody responded the meeting will go over the different potential solutions to traffic in the area and the City will discuss the advantages and disadvantages of each.

Commissioner Gill commented there shouldn't be moratorium on development.

Commissioner Campbell noted that Council can't say fully say no. He noted that we are a free market system, and that development will come.

Chair Sillman noted that the Planning Commission wants to follow the rules, but City Council ultimately decides.

12. Report of Actions of the Yuba City Planning Commission/Sutter County Update

Commissioner Gill provided an update on the following items:

- Two truck yards were approved (one unanimously, and one in a 4/3 vote)
- A mono-pine cell tower by Sutter Highschool was approved.
- A special event permit process was passed.

Adjournment

Chairperson Sillman adjourned the meeting at 7:58 pm.

****

Persons dissatisfied with any decision of the Planning Commission may appeal such action to the City Council. Appeals, accompanied by a fee of $851.26, must be filed with the City Clerk, 1201 Civic Center Boulevard, Yuba City, CA 95993 within 10 days of such action. If no appeal is filed within this time limit, the Planning Commission action becomes final. The exception to this is rezone requests. Please check with the Planning Division, 1201 Civic Center Boulevard, Yuba City, CA 95993 for the procedure. Mailed notices of the Council hearings will be accomplished in the same manner as the Planning Commission hearings unless additional notice is deemed necessary.

CITY OF YUBA CITY
PLANNING COMMISSION
STAFF REPORT

Date: December 13, 2023

To: Chair and Members of the Planning Commission

From: Development Services Department

Presentation by: Aaron Brown, Assistant Planner

Subject: Use Permit (UP) 23-02, Verizon Cell Tower: A request to construct a 60-foot-tall monopole cell tower, that will be camouflaged as a tree, and related ground equipment including a diesel generator for emergency use and a 200-gallon fuel storage tank. The ground equipment will be screened from public view along Clark Avenue by neighboring commercial buildings and will be within a 30-foot by 30-foot fenced area with a masonry wall along the property's east side and a vegetative hedge to reduce the noise and screen views of the equipment from nearby residences.

Recommendation: Following the close of the public hearing adopt a resolution of the Planning Commission of the City of Yuba City approving Environmental Assessment 23-09 by adopting a mitigated negative declaration, subject to the proposed conditions of approval and mitigation measures, and approving Use Permit 23-02 for a 60-foot-high cell tower and related ground equipment on an approximately 1,000 square foot leased area. Located at 223 Clark Avenue (a portion of Assessor's Parcel Number 53-174-001).

Applicant: Epic Wireless on behalf of Verizon Wireless

Property Owner: Daniel Flores, Raminder Bihala, Karmedeep Bihala

Project Location: The approximately 1,000 square foot site is located at 223 Clark Avenue. The site is a portion of the property in the rear of an existing commercial building. Access to the site is via the vacant lot to the south. A portion of Assessor's Parcel Number (APN) 53-174-001.

General Plan: The project site is within the Neighborhood Commercial (NC) land use designation.

Specific Plan: The project site is not within a specific plan.

Zoning: The property is within the Neighborhood Commercial (C-1) Zone District. The Neighborhood Commercial Zone District is, as the name implies, primarily intended for a range of smaller commercial uses designed to serve the neighborhood it is within. As this telecommunications facility is designed to serve the local area, the C-1 Zone District is interpreted to allow this use,

provided that a use permit is first approved as provided in the zoning regulations. The use permit allows for conditioning and mitigation measures to be applied to the cell tower to assure that the it fits within the neighborhood.

Project Description:

Use Permit 23-02 is a request to construct and operate a 60-foot-tall monopole cell tower, to be camouflaged to look like a tree, and related ground equipment including a diesel generator, that will be screened within a 30-foot by 30-foot fenced area. The camouflaged cell tower will be located within the rear portion of an existing neighborhood commercial area (on three sides) but will abut a single-family residence along its west side and the tower will be visible to other residents in the area. The site will be accessed by an internal driveway over a neighboring parcel, connecting the site to Clark Avenue.

Background:

Cell towers are regulated by the Zoning Regulations [Section 8-5.5107(b)] which allows cell towers by-right in all of the commercial zone districts except the C-1 Zone District, provided they do not exceed 60 feet in height. The ordinance also allows cell towers that do not meet the provided criteria if a use permit is first secured. As a result, this is a use permit application to allow a 60-foot cell tower. The use permit allows for individual review and consideration by the Planning Commission based on the project's own merits.

Analysis

Compatibility with neighboring uses:

This approximately 1,000 square foot site has compatible commercial uses on three sides (includes the on-site building on the west side). There is a single-family residence approximately 20 feet west of the site and an apartment complex to the southeast. The 60-foot-tall tower, disguised as a tree, will be visible for some distance in all directions. The two compatibility issues associated with the tower are aesthetics and noise. They are both addressed in the sections below.

TABLE 1: BORDERING LAND USES	
North:	Market across Clinton Street.
South:	Commercial building
East:	Single-family residence and apartment complex (southeast).
West:	An on-site commercial building and across Clark Avenue is the St. Isadore church and school.

Design Review:

The proposed tower is subject to design review (aesthetics) by the Planning Commission per the Yuba City Design Guidelines.

Seeing cell towers within urban areas have become customary and a seemingly necessary part of our urban infrastructure. As with many above-ground utilities, they often are considered by many to be unsightly. At 60-feet tall, the approximately top 30-40 feet of the cell tower will be

visible in all directions including neighboring residences that are generally west of the site and to traffic along Clark Avenue and the uses along Clark Avenue. In this proposal the upper 40 feet of the tower will be camouflaged as a tree, as can be seen in the photo simulations of the tower. These simulations provide view from all angles of how the tower/tree will appear from different sides. Although the tower will not exceed 60 feet in height, the tree portion will extend that to approximately 65 feet. While likely not completely screening the underlying tower, the tree appearance will appreciably improve the tower's aesthetics. The tower/tree appears in the simulations to be slightly taller than neighboring trees but not to any significant extent that would cause it to stand out from a height standpoint as there are other trees in the vicinity, the tower/tree should blend in relatively well.

There will also be accessory equipment around the base of the tower. The neighboring buildings, which are generally under 20 feet in height, will block the view of the base of the tower and the accompanying equipment, except for the neighboring residence to the east and the apartments to the southeast. Without screening, the quality of the view from the neighboring residence would be reduced. However, the C-1 zoning District requires that a masonry wall be constructed along the common property line (in this case it has been interpreted as the lease line) as well as a landscaped hedge that will be constructed along the common residential property lines. The ordinance requires that the wall be a minimum of six feet but since the equipment will be eight feet high, a mitigation is included to heighten the fence to eight feet. This wall and accompanying vegetative hedge would eliminate the single-family residence's view of the equipment area as well as reduce the view from the neighboring apartments to the southeast. As such the aesthetics from the neighboring residences will be acceptable.

As a result of the solid screening of the base equipment and the tower/tree camouflage, it is staff's opinion that a communications tower is a needed portion of the City's infrastructure and all reasonable efforts to blend the tower and screen the equipment into the area have been made.

Landscaping:

As required by the zoning code, a five-foot-wide hedge will be planted along the eastern property line to help screen the view of the lower tower and all of the base equipment from the nearby residences. As it is not shown in the site plan, this is reaffirmed in the conditions of approval and mitigation measures.

Noise:

Project related ongoing noise will be from two on-site sources – a heat exchanger a/c unit and an emergency generator. As the noise could be cause for concern to the residential neighbors, a noise assessment letter was provided by Waterford Consulting, dated October 19, 2023 (See Appendix B of the Environmental Assessment which is Attachment 5 of this staff report).

The heat exchanger, which sometimes may operate on an ongoing basis, will likely not be any louder than a residential air conditioning unit. Per the study, the noise level at the property line would be 37.9 dBA, which is well below the 55-decibel level considered by General Plan policy as always acceptable in residential areas.

The second noise source will be the on-site emergency generator (large lithium batteries are not considered to be acceptable) that will be be utilized during emergency periods and also for weekly

testing. The weekly testing will generally not be more than one-half hour per test. The anticipated noise level at the property line during these short operational periods is estimated to be 51.3 dBA, which is also within acceptable levels. As the Zoning Regulations require a masonry wall be constructed between the facility and the residence the noise will actually be somewhat lower, per the study. The anticipated noise level from the generator, which will typically not be utilized for more than the approximately one-half hour weekly will be well within the General Plan policy for acceptable noise levels in residential areas.

Radio Frequency Radiation (RF) Waves:

Cell towers emit radio frequency radiation (RF) waves via receiving and transmitting with cell phones. There has been concern expressed by some regarding the impact of these waves for cancer in humans. In light of this the following is a summary of information provided by the American Cancer Society (copy of the entire report is provided as Attachment A to the Environmental Assessment that is attached to this report).

- RF waves are like FM radio waves, visible light, and heat as they do not directly damage DNA inside cells, vs stronger ionizing radiation which includes X-rays, gamma rays, and ultraviolet (UV) rays.
- At very high levels RF waves can heat up body tissues, but the levels of energy used by cell phones and cell towers are much lower.
- At ground level near typical cellular base stations, the amount of energy from RF waves is hundreds to thousands of times less than the limits for safe exposure set by U.S. Federal Communications Commission (FCC). It is very unlikely that a person could be exposed to RF levels in excess of these limits by being near a cell tower.

While the American Cancer Society does not have any official position or statement on whether or not RV waves from cell phone towers cause cancer, they do reference other agencies that do. The general consensus in that report is that based on current studies there is insufficient evidence that RF waves from cell towers is carcinogenic. As such, the impact from RF waves on the local residences is not considered to be an issue.

Availability of City services:

City water and wastewater are available to the property, but the operation of the cell tower does not require regular water and sewer and water connections. The stormwater drainage system is nearby for the small increase in stormwater.

Environmental Considerations:

An environmental assessment was prepared for this project in accordance with the requirements of the California Environmental Quality Act (CEQA) Guidelines. This process included the distribution of requests for comment from other responsible or affected agencies and interested organizations.

Based upon the attached environmental assessment, including the proposed mitigation measures, staff has determined that there is no evidence in the record that the project may generate any new significant effects on the environment and recommends adoption of a mitigated negative declaration for this project. The findings of the mitigated negative declaration are that,

with the proposed mitigation measures for Greenhouse Gases, Geology and Soils, and Tribal Cultural Resources, proposed Use Permit 23-02 will not create any significant impacts to the environment, including the neighborhood or vicinity. As a result, the adoption of a mitigated negative declaration is appropriate in accordance with the provisions of CEQA. The proposed mitigation measures are included as project conditions of approval.

Recommended Actions:

Following the close of the public hearing adopt a resolution of the Planning Commission of the City of Yuba City approving Environmental Assessment 23-09 by adopting a mitigated negative declaration, subject to the proposed conditions of approval and mitigation measures, and approving Use Permit 23-02 for a 60-foot-high cell tower and related ground equipment on an approximately 1,000 square foot leased area. Located at 223 Clark Avenue (a portion of Assessor's Parcel Number 53-174-001).

Attachments:

1. Location Map
2. Planning Commission Resolution (UP 23-02)
    - Exhibit A: UP 23-02 Site plan and tower elevations
    - Exhibit B: UP 23-02 Mitigation Measures and Conditions of Approval
3. Photo simulations of the completed tower
4. Existing and Proposed Coverage Maps
5. Noise Study
6. Environmental Assessment 23-09 and the Mitigation Monitoring and Reporting Program.

ATTACHMENT 1

Monopole Cell Tower

Use Permit 23-02 | Location Map

ATTACHMENT 2

PLANNING COMMISSION RESOLUTION NO. PC 23-27

RESOLUTION OF THE PLANNING COMMISSION OF THE CITY OF YUBA CITY APPROVING ENVIRONMENTAL ASSESSMENT 23-09 BY ADOPTING A MITIGATED NEGATIVE DECLARATION SUBJECT TO THE CONDITIONS OF APPROVAL AND MITIGATION MEASURES, AND APPROVING USE PERMIT 23-02 FOR A 60-FOOT-HIGH CELL TOWER AND RELATED GROUND EQUIPMENT, LOCATED AT 233 CLARK AVENUE, BEHIND AN EXISTING COMMERCIAL BUILDING. A PORTION OF ASSESSOR'S PARCEL NUMBER 53-174-001.

WHEREAS, the City received an application for Use Permit (UP) 23-02 to construct a 60-foot-high cell tower that will be camouflaged as a tree, and related ground based operating equipment on an approximately 1,000 square foot lease site; and

WHEREAS, this property is within Yuba City's city limits and the property owner wished to further develop their property, and the property is provided with full City services; and

WHEREAS, a review of the General Plan, and an interpretation of the Zoning Regulations determined that proposed UP 23-02 will be an appropriate use subject to the conditions of approval and mitigation measures, provided a use permit is first approved, within the Neighborhood Commercial General Plan land use designation and the proposal meets all of the C-1 Zone District development standards; and

WHEREAS, the City on November 22, 2023, published a legal notice and a public hearing notice was mailed to each property owner within at least 300 feet of the project site in compliance with State law concerning the Planning Commission's consideration on December 13, 2023; and

WHEREAS, the Planning Commission held a duly noticed public hearing on December 13, 2023, and considered all of the project and environmental information presented by staff, public testimony, and all of the background information; and

WHEREAS, the Planning Commission reviewed related Environmental Assessment 23-09 which was prepared for this use permit considering a Mitigated Negative Declaration (MND) prepared for the project, which concluded that this project, with the proposed mitigation measures and conditions of approval, will not generate any significant environmental impacts; and

WHEREAS, after deliberation and consideration of all the relevant items, the Planning Commission now desires to approve UP 23-02; and

WHEREAS, all legal prerequisites to the adoption of this Resolution have occurred.

NOW, THEREFORE, BE IT RESOLVED the Planning Commission of the City of Yuba City as follows:

1. Recitals. The Planning Commission hereby specifically finds that all of the facts set forth in the recitals above are true and correct and incorporated herein.

2. CEQA Finding. The Planning Commission finds and determines that there is no substantial evidence in the record that UP 23-02, subject to its conditions of approval and mitigation measures, may have a significant effect on the environment as identified by the MND and finds that an environmental assessment/initial study was prepared for the Project in accordance with the requirements of the California Environmental Quality Act (CEQA) Guidelines, and reflects the Planning Commission's independent judgment and analysis. The process included the distribution of requests for comments from other responsible or affected agencies and interested organizations. Preparation of Environmental Assessment 23-09 necessitated a thorough review of the proposed project and relevant environmental issues and considered previously prepared environmental and technical studies. While the proposed project could have a potentially significant effect on the environment, based on its independent judgement and analysis the Planning Commission finds that feasible mitigation measures or alternatives have been incorporated into the project in order to avoid the effects to a point where clearly no significant effect on the environment will occur, and there is no substantial evidence in the record that this Project may have any direct, indirect or cumulative effects on the environment that are potentially significant. The proposed project will not result in any adverse effects which fall within the "Mandatory Findings of Significance" contained in Section 15065 of the State CEQA Guidelines. The project-specific mitigation measures included in the project to avoid potentially significant effects are set forth in the attached Initial Study/Mitigated Negative Declaration and accompanying Mitigation Monitoring and Reporting Program. With the project specific mitigations imposed, there is no substantial evidence in the record that this project may have significant direct, indirect, or cumulative effects on the environment. As such, the Planning Commission finds and determines that in light of the entire administrative record and the substantial evidence before it, the project has been adequately environmentally assessed as required by CEQA per Environmental Assessment 23-09.

3. Adoption of the Mitigated Negative Declaration and Mitigation Monitoring and Reporting Program. Based on the foregoing, the Planning Commission adopts the Mitigated Negative Declaration prepared for UP 23-02 including the associated Mitigation Monitoring and Reporting Program, as the project will not result in any significant, adverse environmental impacts with the mitigations proposed. The Yuba City Development Services Department is located at 1201 Civic Center Boulevard, Yuba City, CA 95993, and is designated as the custodian of the documents and other materials that constitute the record of the proceedings upon which the decision is based. The Planning Commission further authorizes the Director, or designee, to execute and file with the Sutter County Clerk, as appropriate, a Notice of Determination for approval of the project that complies with CEQA Guidelines.

4. Use Permit Findings. Based upon analysis of the Use Permit application and subject to the applicant's compliance with the conditions of approval and mitigation measures, the following required findings of Section 8-5.7001(C) of the Municipal Code are made:

   a. The proposal is consistent with the General Plan:

   Evidence: While General Plan text and policies do not directly address cell towers, various General Plan Elements discuss the City as being a compact community with full services being available in all areas and neighborhoods that increases the ability of people to live and work in the City. In more recent years cell phone use has become an integral part of the functioning of the City and its neighborhoods. Telecommunications facilities are now as necessary as electric and phone lines and sewer and water lines. The theme is that these basic infrastructure facilities are necessary in all neighborhoods, retail centers

and places of employment. The General Plan does not exclude infrastructure facilities from any area, recognizing they are needed in all parts of the City. This is implemented in the Zoning Regulations, which are designed to implement the General Plan, by not prohibiting these utilities but instead provides criteria for development of these facilities. In this case the proposed telecommunications facility has been designed to fit into the area it will be located with a height limit determined by the Zoning Regulations, tower/tree design, solid and vegetative screening, and noise attenuation.

On a more technical scale, the proposed cell tower was interpreted to be an allowed use subject to a use permit in the C-1 Zone District based on the provisions of the Zoning Regulations for telecommunication facilities. The C-1 Zone District by definition is consistent with the Neighborhood Commercial General Plan designation, and that the environmental document and staff report prepared for the proposal did not identify any general plan inconsistencies, and that the proposal meets all of the City's development standards and design criteria. As such the proposal is consistent with the General Plan.

b. *The site for the proposed use is adequate in size and shape to accommodate said use, public access, parking and loading, yards, landscaping, and other features required by this Chapter (Zoning Regulations).*

Evidence: The proposal meets all City standards and design criteria. This includes a design making the cell tower resemble a tree, which improves the tower's aesthetics, and the masonry wall and other solid fencing that limits visibility of the tower base and related ground equipment. The noise study prepared for the project concluded that noise should not be a significant factor from the noise generated by the project with further noise reduction from the construction of an eight-foot masonry wall along the east side of the site. The landscaping standard is met by the planting of a vegetative hedge along the eastern property line. The tower and equipment do not require connections to the City's water and wastewater collection system, does not generate significant traffic and needs only a minor driveway access for occasional service workers. As such, the site is of adequate size and shape and has good access.

c. *The streets serving the site are adequate to carry the quantity of traffic generated by the proposed use.*

Evidence: The site is portion of a previously developed commercial property that is accessed by a private driveway over an offsite parcel which will be paved, and irrevocable access will be guaranteed to Clark Avenue. Clark Avenue is designated in the General Plan as a collector street. The cell tower does not require public access but will be accessed by employees for occasional maintenance. Except during the short tower construction period, Clark Avenue will not be impacted by additional traffic to the facility.

d. *The site design, design of the building, and scale of the project will complement neighboring facilities.*

Evidence: The potential incompatibility between the proposed cell tower and the neighboring uses (primarily nearby residences) will better blend in with the local aesthetics as the tower is designed to look like a tree. The accompanying ground equipment would potentially be visible from only one neighboring residence, but that visibility will be eliminated by the construction of a masonry wall along the east side of the site and a

landscaping hedge along the property line. A noise study also concluded that noise from the operation of the cell tower and testing of an emergency generator would remain within acceptable levels for neighboring residents and construction of an eight-foot masonry wall will further reduce the noise. As such the aesthetics and noise from the cell tower is conditioned and mitigated to be compatible with the neighborhood.

e. *The project will not be detrimental to the health, safety, peace, comfort, and general welfare of persons residing or working in the vicinity.*

Evidence: Based on the initial study prepared for the Project, which considers impacts on this site and neighboring residences, and neighboring commercial properties, and with the implementation of the C-1 Zone District Development Standards and the required conditions of approval and mitigation measures, there will be no significant environmental impacts for aesthetics, cultural resources, greenhouse gases and geology and soils created by the completion of this Project on neighboring uses and their employees and customers.

5. Flood Finding. There is adequate flood protection for the project as required by Title 6, Chapter 9, Article 6 of the Municipal Code.

Evidence: This proposal complies with this finding as the Sutter Butte Flood Control Agency (SBFCA) is the "Local Flood Management Agency" for the Sutter-Butte Basin and as such, has the responsibility to prepare an annual report demonstrating adequate progress as defined in California Government Code Section 645007 (a). SBFCA has prepared Adequate Progress Report Updates for ULOP and transmitted them to the Central Valley Flood Protection Board. As such this site has adequate flood protection. Additionally, the City has imposed conditions on the Use Permit that will protect property within the area to the urban level in urban areas and urbanizing areas.

6. Approval of Use Permit 23-02. The Planning Commission, based on Environmental Assessment 23-09 and the list of identified mitigation measures which have been made conditions of approval of the project, determines the project will not have a significant impact on the environment, approves UP 23-02 for a Verizon cell tower and associated ground equipment, as shown in **Exhibit A**, subject to the conditions of approval and mitigation measures as provided in **Exhibit B**.

7. Effective Date of Resolution. This Resolution shall become effective immediately.

The foregoing Resolution was introduced at the regular meeting of the Planning Commission on December 13, 2023, by Commissioner _____ who moved its adoption, which motion was seconded by Commissioner _____ and carried by the following vote:

Ayes:

Noes:

Absent:

Recused:

By order of the Planning Commission of the City of Yuba City.

_____
Jackie Sillman, Planning Commission Chair

ATTEST:

_____
Benjamin Moody, Secretary to the Planning Commission

Attachments:

Exhibit A: UP 23-02 Site plan and tower elevations
Exhibit B: UP 23-02 Mitigation Measures and Conditions of Approval

EXHIBIT A

HONKERS

223 CLARK AVENUE, YUBA CITY, CA 95991
MDG LOCATION ID: 5000227263
PROJECT ID: 16097049

PROJECT DESCRIPTION

A (N) VERIZON WIRELESS UNMANNED TELECOMMUNICATION FACILITY CONSISTING OF INSTALLING:

- (N) VERIZON WIRELESS 30'–0"X30'–0" (900 SQ FT) LEASE AREA
- (12) (N) ANTENNAS ON (N) MONOPINE
- (9) (N) RADIO UNITS @ ANTENNAS
- (4) (N) SURGE SUPPRESSORS, (2) @ EQUIPMENT & (2) @ ANTENNAS
- (1) (N) GPS ANTENNA
- (4) (N) 6X12 HYBRID CABLES
- (1) (N) 30KW DIESEL GENERATOR ON (N) 210 GALLON UL 142 RATED FUEL TANK
- (N) UTILITIES TO (N) SITE LOCATION

PROJECT INFORMATION

SITE NAME:	HONKERS	MDG LOCATION ID:	5000227263
COUNTY:	SUTTER	JURISDICTION:	CITY OF YUBA CITY
APN:	53–174–001	POWER:	PG&E
SITE ADDRESS:	223 CLARK AVENUE YUBA CITY, CA 95991	LEASING CONTACT:	ATTN: MELISSA VIOS (916) 755–2480 MELISSA.VIOS@EPICWIRELESS.NET
CURRENT ZONING:	C–1 (COMMERCIAL)	ZONING CONTACT:	ATTN: MELISSA VIOS (916) 755–2480 MELISSA.VIOS@EPICWIRELESS.NET
CONSTRUCTION TYPE:	I–B		
OCCUPANCY TYPE:	U, (UNMANNED COMMUNICATIONS FACILITY)		
PROPERTY OWNER:	RAMINDER & KARMEDEEP BIHALA 1460 CRESCENT COURT YUBA CITY, CA 95991 ATTEN: RAMINDER BIHALA	CONSTRUCTION CONTACT:	ATTN: JOE ZAGAR (916) 747–5758 JOE.ZAGAR@EPICWIRELESS.NET
APPLICANT:	VERIZON WIRELESS 2770 SHADELANDS DRIVE, BLDG 11 WALNUT CREEK, CA 94598	LATITUDE:	N 39° 07' 26.81" NAD 83 N (39.124114°) NAD 83
		LONGITUDE:	W 121° 37' 27.47" NAD 83 W (–121.624297°) NAD 83
SITE ACQUISITION:	EPIC WIRELESS GROUP, INC. 605 COOLIDGE DRIVE, SUITE 1 FOLSOM, CA 95630	GROUND ELEVATION:	±53' AMSL

DESIGN CRITERIA

RISK CATEGORY: II	ROOF LIVE LOAD: N/A	FLOOR LIVE LOAD: N/A	ALLOW SOIL BEARING: N/A
WIND EXPOSURE: C	DESIGN WIND SPEED: 94 MPH	GROUND ELEVATION: 0'	TOPOGRAPHIC CATEGORY: I
SEISMIC SITE CLASS: D	SEISMIC DESIGN CATEGORY: D	SEISMIC COMPONENT I_P: 1.0	a_p: 1.0 R_P: 2.5
S_{DS}: 0.488	S_{D1}: N/A	S_S: 0.533	S_1: 0.253

TESTS AND SPECIAL INSPECTIONS

STREAMLINE ENGINEERING & DESIGN, INC. DOES NOT REQUIRE ANY STRUCTURAL OBSERVATION OR SPECIAL INSPECTION OF ANY STRUCTURAL COMPONENT ABOVE & BEYOND WHAT IS LISTED BELOW UNLESS OTHERWISE REQUIRED BY JURISDICTION.

PROVIDE COMPLETE TESTING AND INSPECTIONS IN ACCORDANCE WITH THE CBC, CHAPTER 17 AS NOTED BELOW:

1. POST INSTALLED ANCHORS IN ACCORDANCE WITH CURRENT ICC REPORTS FOR THE SPECIFIED ANCHORAGES.

VICINITY MAP

At all services & grounding trenches, provide " WARNING" tape at 12" below grade.

CALL "CALL BEFORE YOU DIG" 811

NATIONWIDE UNDERGROUND SERVICE ALERT

CODE COMPLIANCE

ALL WORK & MATERIALS SHALL BE PERFORMED & INSTALLED IN ACCORDANCE WITH THE CURRENT EDITIONS OF THE FOLLOWING CODES AS ADOPTED BY THE LOCAL GOVERNING AUTHORITIES. NOTHING IN THESE PLANS IS TO BE CONSTRUED TO PERMIT WORK NOT CONFORMING TO THESE CODES:

2022 CALIFORNIA ADMINISTRATIVE CODE, PART 1, TITLE 24 C.C.R.
2022 CALIFORNIA BUILDING CODE (CBC), PART 2, VOLUME 1&2, TITLE 24 C.C.R.
(2021 INTERNATIONAL BUILDING CODE AND 2022 CALIFORNIA AMENDMENTS)
2022 CALIFORNIA ELECTRICAL CODE (CEC), PART 3, TITLE 24 C.C.R.
(2020 NATIONAL ELECTRICAL CODE AND 2022 CALIFORNIA AMENDMENTS)
2022 CALIFORNIA MECHANICAL CODE (CMC) PART 4, TITLE 24 C.C.R.
(2021 UNIFORM MECHANICAL CODE AND 2022 CALIFORNIA AMENDMENTS)
2022 CALIFORNIA PLUMBING CODE (CPC), PART 5, TITLE 24 C.C.R.
(2021 UNIFORM PLUMBING CODE AND 2022 CALIFORNIA AMENDMENTS)
2022 CALIFORNIA ENERGY CODE (CEC), PART 6, TITLE 24 C.C.R.
2022 CALIFORNIA FIRE CODE, PART 9, TITLE 24 C.C.R.
(2021 INTERNATIONAL FIRE CODE AND 2022 CALIFORNIA AMENDMENTS)
2022 CALIFORNIA GREEN BUILDING STANDARDS CODE, PART 11, TITLE 24 C.C.R.
2022 CALIFORNIA REFERENCED STANDARDS, PART 12, TITLE 24 C.C.R.
ANSI/EIA–TIA–222–H

ALONG WITH ANY OTHER APPLICABLE LOCAL & STATE LAWS AND REGULATIONS

DISABLED ACCESS REQUIREMENTS

THIS FACILITY IS UNMANNED & NOT FOR HUMAN HABITATION. DISABLED ACCESS & REQUIREMENTS ARE NOT REQUIRED IN ACCORDANCE WITH CALIFORNIA STATE BUILDING CODE, TITLE 24 PART 2, SECTION 11B–203.5

SHEET INDEX

SHEET	DESCRIPTION	REV
T–1	TITLE SHEET	–
C–1	TOPOGRAPHIC SURVEY	–
A–1	SITE PLAN	–
A–2	EQUIPMENT PLAN	–
A–3	ANTENNA PLAN	–
A–4	ELEVATIONS	–
A–5	DETAILS	–

HONKERS

223 CLARK AVENUE
YUBA CITY, CA 95991

2770 SHADELANDS DRIVE, BLDG 11
WALNUT CREEK, CA 94598

Streamline Engineering and Design, Inc.
8445 Sierra College Blvd, Suite E Granite Bay, CA 95746
Contact: Kevin Sorensen Phone: 916-660-1930
E-Mail: kevin@streamlineeng.com Fax: 916-660-1941

THESE PLANS AND SPECIFICATIONS, AS INSTRUMENTS OF SERVICE, ARE AND SHALL REMAIN THE PROPERTY OF STREAMLINE ENGINEERING & DESIGN, INC. WHETHER THE PROJECT FOR WHICH THEY WERE MADE IS EXECUTED OR NOT. THESE DRAWINGS AND SPECIFICATIONS SHALL NOT BE USED BY ANY PERSON OR ENTITY ON OTHER PROJECTS WITH OUT PRIOR WRITTEN CONSENT OF THE ENGINEER. Copyright © 2008, STREAMLINE ENGINEERING AND DESIGN INC. ALL RIGHTS RESERVED.

PRELIMINARY: NOT FOR CONSTRUCTION

KEVIN R. SORENSEN
S4469

ISSUE STATUS

△	DATE	DESCRIPTION	REV.
	11/12/21	ZD 90%	I.M.
	12/23/21	ZD 100%	S.D.
	08/24/22	CLIENT REV	C.T.C.
	08/02/23	CLIENT REV	S.B.D.
	10/18/23	CLIENT REV	S.B.D.
	–	–	–

DRAWN BY: S. DANIELS
CHECKED BY: J. GRAY
APPROVED BY: –
DATE: 10/18/23

SHEET TITLE:
TITLE SHEET

SHEET NUMBER:
T-1

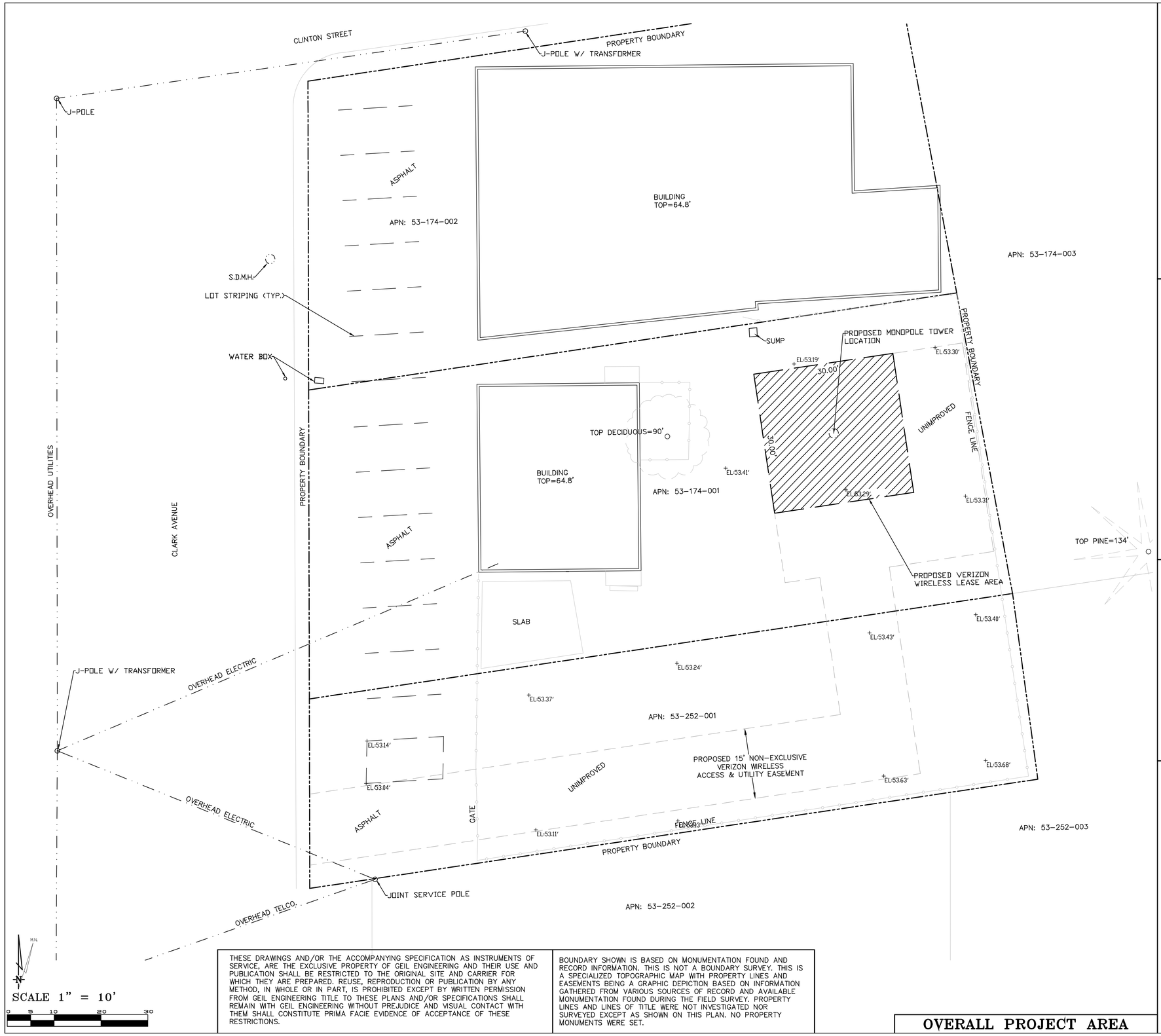

THESE DRAWINGS AND/OR THE ACCOMPANYING SPECIFICATION AS INSTRUMENTS OF SERVICE, ARE THE EXCLUSIVE PROPERTY OF GEIL ENGINEERING AND THEIR USE AND PUBLICATION SHALL BE RESTRICTED TO THE ORIGINAL SITE AND CARRIER FOR WHICH THEY ARE PREPARED. REUSE, REPRODUCTION OR PUBLICATION BY ANY METHOD, IN WHOLE OR IN PART, IS PROHIBITED EXCEPT BY WRITTEN PERMISSION FROM GEIL ENGINEERING TITLE TO THESE PLANS AND/OR SPECIFICATIONS SHALL REMAIN WITH GEIL ENGINEERING WITHOUT PREJUDICE AND VISUAL CONTACT WITH THEM SHALL CONSTITUTE PRIMA FACIE EVIDENCE OF ACCEPTANCE OF THESE RESTRICTIONS.

BOUNDARY SHOWN IS BASED ON MONUMENTATION FOUND AND RECORD INFORMATION. THIS IS NOT A BOUNDARY SURVEY. THIS IS A SPECIALIZED TOPOGRAPHIC MAP WITH PROPERTY LINES AND EASEMENTS BEING A GRAPHIC DEPICTION BASED ON INFORMATION GATHERED FROM VARIOUS SOURCES OF RECORD AND AVAILABLE MONUMENTATION FOUND DURING THE FIELD SURVEY. PROPERTY LINES AND LINES OF TITLE WERE NOT INVESTIGATED NOR SURVEYED EXCEPT AS SHOWN ON THIS PLAN. NO PROPERTY MONUMENTS WERE SET.

OVERALL PROJECT AREA

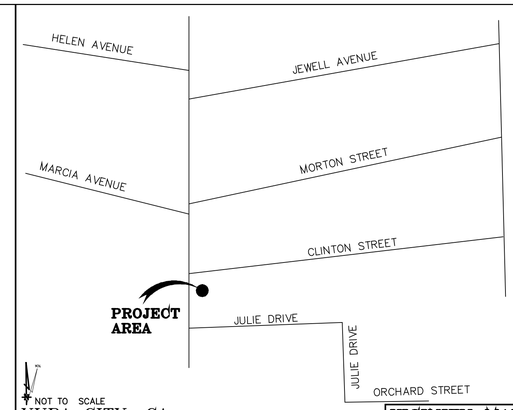

YUBA CITY, CA

VICINITY MAP

Lease Area Description

All that certain lease area being a portion of that certain parcel of land described in Deed filed for record at Document No. 2019-0007510, Official Records of Sutter County, being located in the City of Yuba City, County of Sutter, State of California and being more particularly described as follows:

Commencing at a brass cap in monument box set along the centerline of Julie Drive at the intersection of the East line of Clark Avenue as shown on that certain Tract Map filed for record at Book 12 of Tracts at Page 14, Official Records, from which a similar monument bears North 81°28'13" East 129.03 feet; thence from said point of commencement North 19°18'44" East 260.05 feet to the True Point of Beginning; thence from said point of beginning North 81°28'13" East 30.00 feet; thence North 08°31'47" West 30.00 feet; thence South 81%^%D28'13" West 30.00 feet; thence South 08°31'47" East 30.00 feet to the point of beginning.

Together with a non-exclusive easement for access and utility purposes fifteen feet in width the centerline of which is described as follows: Beginning at a point which bears North 81°28'13" East 7.50 feet from the most Northerly corner of the above described lease area and running thence from said point of beginning South 08°31'47" East 37.50 feet; thence South 81°28'13" West 22.50 feet to a point hereafter defined as Point "A"; thence South 08°31'47" East 44.57 feet; thence South 81°28'13" West 123.1 feet more or less to the public right of way.

Also together with a non-exclusive easement for access and utility purposes fifteen feet in width the centerline of which is described as follows: Beginning at Point "A" as previously defined and running thence South 81°28'13" West 15.00 feet.

DATE OF SURVEY: 11-04-21

SURVEYED BY OR UNDER DIRECTION OF: KENNETH D. GEIL, R.C.E. 14803

LOCATED IN THE COUNTY OF SUTTER, STATE OF CALIFORNIA

CONTRACTOR IS RESPONSIBLE FOR VERIFICATION OF LEASE AREA PRIOR TO CONSTRUCTION.

BEARINGS SHOWN ARE BASED UPON MONUMENTS FOUND AND RECORD INFORMATION. THIS IS NOT A BOUNDARY SURVEY.

ELEVATIONS SHOWN ON THIS PLAN ARE BASED UPON U.S.G.S. N.A.V.D. 88 DATUM. ABOVE MEAN SEA LEVEL UNLESS OTHERWISE NOTED.

N.G.V.D. 1929 CORRECTION: SUBTRACT 2.28' FROM ELEVATIONS SHOWN.

CONTOUR INTERVAL: N/A

ASSESSOR'S PARCEL NUMBER: 53-174-001

LANDLORD(S): RAMINDER BIHALA
1460 CRESCENT COURT
YUBA CITY, CA 95991

Geil Engineering
Engineering * Surveying * Planning
1226 High Street
Auburn, California 95603-5015
Phone: (530) 885-0426 * Fax: (530) 823-1309

Verizon Wireless
PCS Equipment A.S.A.C. Survey Form

Project Name: HONKERS

Project Site Location: 223 Clark Avenue
Yuba City, CA 95991

Date of Observation: 11-04-21

Equipment/Procedure Used to Obtain Coordinates: Trimble GeoXT post processed with Pathfinder Office software.

Coordinates (Tower)
Latitude: N 39° 07' 26.81"(NAD83) N 39° 07' 27.20"(NAD27)
Longitude: W 121° 37' 27.47"(NAD83) W 121° 37' 23.59"(NAD27)

ELEVATION of Ground at Structure (NAVD88) 53' AMSL

CERTIFICATION: I, the undersigned, do hereby certify elevation listed above is based on a field survey done under my supervision and that the accuracy of those elevations meet or exceed 1-A Standards as defined in the FAA ASAC Information Sheet 91:003, and that they are true and accurate to the best of my knowledge and belief.

Kenneth D. Geil California RCE 14803

DEPT	APPROVED	DATE
A&C		
RE		
RF		
INT		
EE\IN		
OPS		
EE\OUT		

Surveyor

GEIL ENGINEERING
ENGINEERING * SURVEYING * PLANNING
1226 HIGH STREET
AUBURN, CALIFORNIA 95603
Phone: (530) 885-0426
Fax: (530) 823-1309

Verizon

HONKERS
223 CLARK AVENUE
YUBA CITY, CA 95991
PLOT PLAN AND
SITE TOPOGRAPHY

REVISIONS		
11-04-21	Drawing Re-Submittal	NR

Sheet

C-1

PROJECT GENERAL NOTES

1. THIS FACILITY IS AN UNOCCUPIED WIRELESS TELECOMMUNICATION FACILITY.
2. PLANS ARE NOT TO BE SCALED AND ARE INTENDED TO BE A DIAGRAMMATIC OUTLINE ONLY, UNLESS NOTED OTHERWISE.
3. THE SCOPE OF WORK SHALL INCLUDE FURNISHING MATERIALS, EQUIPMENT, APPURTENANCES AND LABOR NECESSARY TO COMPLETE ALL INSTALLATIONS AS INDICATED ON THE DRAWINGS.
4. PRIOR TO THE SUBMISSION OF BIDS, THE CONTRACTORS SHALL VISIT THE JOB SITE AND BE RESPONSIBLE FOR ALL CONTRACT DOCUMENTS, FIELD CONDITIONS AND DIMENSIONS, AND CONFIRM THAT THE WORK MAY BE ACCOMPLISHED AS SHOWN PRIOR TO PROCEEDING WITH CONSTRUCTION. ANY DISCREPANCIES ARE TO BE BROUGHT TO THE ATTENTION OF THE CONSTRUCTION MANAGER AND ENGINEER PRIOR TO PROCEEDING WITH THE WORK.
5. IT IS THE RESPONSIBILITY OF THE CONTRACTOR TO PAY FOR PERMIT FEES, AND TO OBTAIN SAID PERMITS AND TO COORDINATE INSPECTIONS.
6. THE CONTRACTOR SHALL RECEIVE, IN WRITING, AUTHORIZATION TO PROCEED BEFORE STARTING WORK ON ANY ITEM NOT CLEARLY DEFINED OR IDENTIFIED BY THE CONTRACT DOCUMENTS.
7. CALL BEFORE YOU DIG. CONTRACTOR IS REQUIRED TO CALL 811 (NATIONWIDE "CALL BEFORE YOU DIG" HOTLINE) AT LEAST 72 HOURS BEFORE DIGGING.
8. ALL WORK PERFORMED AND MATERIALS INSTALLED SHALL BE IN STRICT ACCORDANCE WITH ALL APPLICABLE CODES, REGULATIONS, AND ORDINANCES. CONTRACTOR SHALL GIVE ALL NOTICES AND COMPLY WITH ALL LAWS, ORDINANCES, RULES, REGULATIONS AND LAWFUL ORDERS OF ANY PUBLIC AUTHORITY REGARDING THE PERFORMANCE OF THE WORK.
9. THE GENERAL CONTRACTOR SHALL SUPERVISE AND DIRECT THE WORK USING THE BEST SKILLS AND ATTENTION. THE CONTRACTOR SHALL BE SOLELY RESPONSIBLE FOR ALL CONSTRUCTION MEANS, METHODS, TECHNIQUES, SEQUENCES AND PROCEDURES. CONTRACTOR SHALL ALSO COORDINATE ALL PORTIONS OF THE WORK UNDER THE CONTRACT; INCLUDING CONTACT AND COORDINATION WITH THE CONSTRUCTION MANAGER AND WITH THE LANDLORD'S AUTHORIZED REPRESENTATIVE.
10. THE CONTRACTOR SHALL MAKE NECESSARY PROVISIONS TO PROTECT EXISTING IMPROVEMENTS, PAVING, CURBS, GALVANIZED SURFACES, ETC., AND UPON COMPLETION OF WORK, REPAIR ANY DAMAGE THAT OCCURRED DURING CONSTRUCTION TO THE SATISFACTION OF THE PROJECT MANAGER.
11. KEEP GENERAL AREA CLEAN, HAZARD FREE, AND DISPOSE OF ALL DIRT, DEBRIS AND RUBBISH. REMOVE EQUIPMENT NOT SPECIFIED AS REMAINING ON THE PROPERTY. LEAVE PREMISES IN CLEAN CONDITION AND FREE FROM PAINT SPOTS, DUST, OR SMUDGES OF ANY NATURE.
12. ALL EXISTING INACTIVE SEWER, WATER, GAS, ELECTRIC, AND OTHER UTILITIES, WHICH INTERFERE WITH THE EXECUTION OF THE WORK, SHALL BE REMOVED AND/OR CAPPED, PLUGGED, OR OTHERWISE DISCONNECTED AT POINTS WHICH WILL NOT INTERFERE WITH THE EXECUTION OF THE WORK, AS DIRECTED BY THE RESPONSIBLE ENGINEER, AND SUBJECT TO THE APPROVAL OF THE OWNER AND/OR LOCAL UTILITIES.
13. ALL EXISTING ACTIVE SEWER, WATER, GAS, ELECTRIC AND ALL OTHER UTILITIES WHERE ENCOUNTERED IN THE WORK SHALL BE PROTECTED AT ALL TIMES.
14. DETAILS ARE INTENDED TO SHOW END RESULT OF DESIGN. MINOR MODIFICATIONS MAY BE REQUIRED TO SUIT JOB DIMENSIONS OR CONDITIONS, AND SUCH MODIFICATIONS SHALL BE INCLUDED AS PART OF THE WORK.
15. THE CONTRACTOR SHALL PROVIDE A TOILET FACILITY DURING ALL PHASES OF CONSTRUCTION.
16. SUFFICIENT MONUMENTATION WAS NOT RECOVERED TO ESTABLISH THE POSITION OF THE BOUNDARY LINES SHOWN HEREON. THE BOUNDARY REPRESENTED ON THIS MAP IS BASED ON COMPILED RECORD DATA AND BEST FIT ONTO EXISTING IMPROVEMENTS. IT IS POSSIBLE FOR THE LOCATION OF THE SUBJECT PROPERTY TO SHIFT FROM THE PLACEMENT SHOWN HEREON WITH ADDITIONAL FIELD WORK AND RESEARCH. THEREFORE ANY SPATIAL REFERENCE MADE OR SHOWN BETWEEN THE RELATIONSHIP OF THE BOUNDARY LINES SHOWN HEREON AND EXISTING GROUND FEATURES, EASEMENTS OR LEASE AREA IS INTENDED TO BE APPROXIMATE AND IS SUBJECT TO VERIFICATION BY RESOLVING THE POSITION OF THE BOUNDARY LINES.
17. THE CONTRACTOR TO VERIFY THE LATEST/CURRENT RF DESIGN.
18. WHERE APPLICABLE, CONTRACTOR SHALL PROVIDE SEPARATE PLANS, SPECIFICATIONS, FEES AND PERMITS FOR ANY REVISION TO ANY FIRE SPRINKLER AND/OR ALARM SYSTEM ON THE PREMISES AS MAY BE NEEDED TO COMPLETE THE WORK DEPICTED HEREIN, USING A C-10 LICENSED SUBCONTRACTOR FOR ALL SUCH WORK.

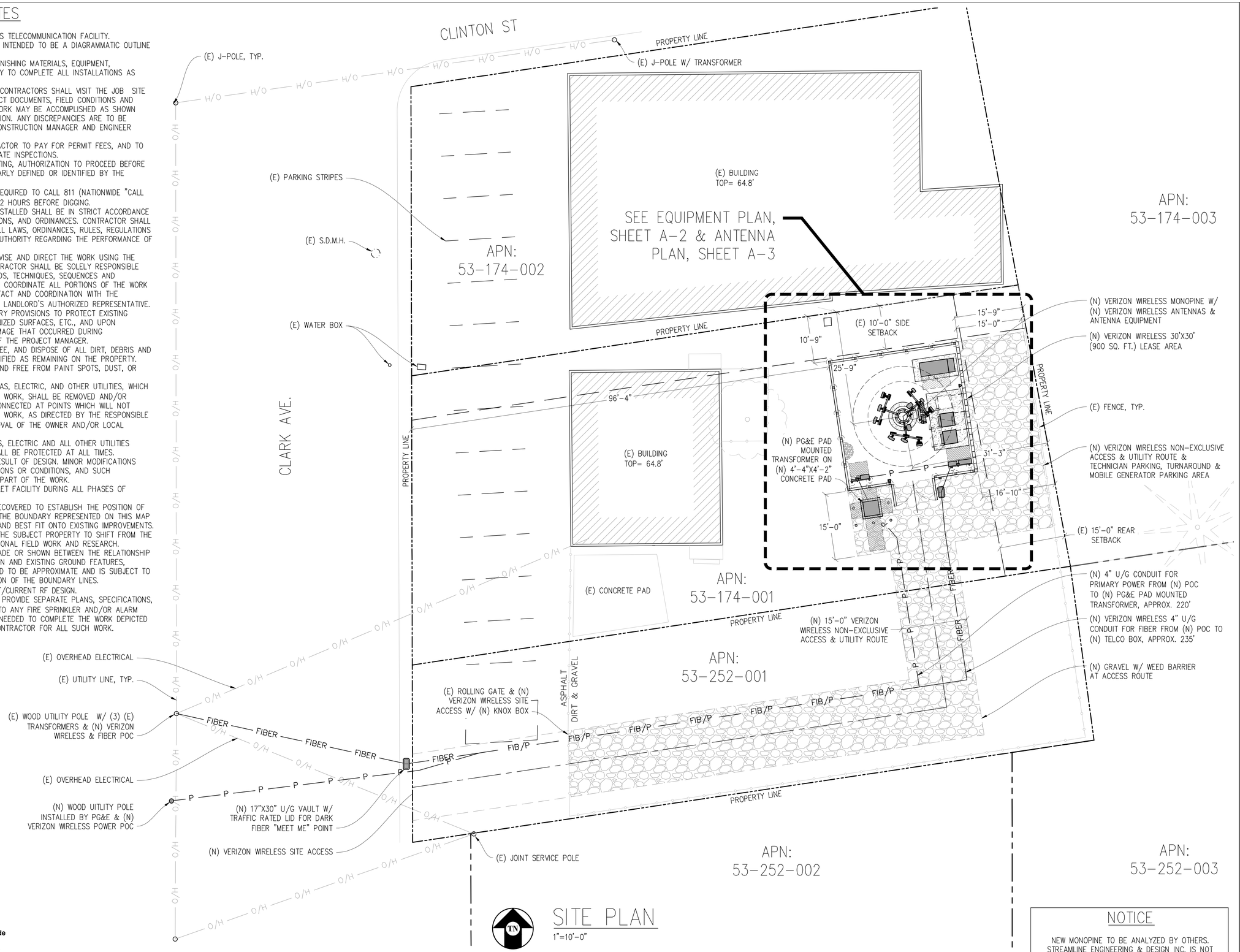

SITE PLAN

1"=10'-0"

At all services & grounding trenches, provide " WARNING" tape at 12" below grade.

CALL "CALL BEFORE YOU DIG" 811

NATIONWIDE UNDERGROUND SERVICE ALERT

NOTICE

NEW MONOPINE TO BE ANALYZED BY OTHERS. STREAMLINE ENGINEERING & DESIGN INC. IS NOT RESPONSIBLE FOR THE EVALUATION OF THE NEW POLE, BASE PLATE, ANCHOR BOLTS, FOUNDATION OR ANTENNA/RRU MOUNT FRAMING & CONNECTIONS FOR THE EXISTING AND NEW LOADING CONDITIONS.

HONKERS

223 CLARK AVENUE
YUBA CITY, CA 95991

verizon

2770 SHADELANDS DRIVE, BLDG 11
WALNUT CREEK, CA 94598

Streamline Engineering and Design, Inc.
8445 Sierra College Blvd, Suite E Granite Bay, CA 95746
Contact: Kevin Sorensen Phone: 916-660-1930
E-Mail: kevin@streamlineeng.com Fax: 916-660-1941

THESE PLANS AND SPECIFICATIONS, AS INSTRUMENTS OF SERVICE, ARE AND SHALL REMAIN THE PROPERTY OF STREAMLINE ENGINEERING & DESIGN INC. WHETHER THE PROJECT FOR WHICH THEY ARE MADE IS EXECUTED OR NOT. THE REPRODUCTION OF THESE DRAWINGS AND SPECIFICATIONS SHALL NOT BE USED BY ANY PERSON OR ENTITY ON OTHER PROJECTS WITH OUT PRIOR WRITTEN CONSENT OF THE EMINENCE. Copyright 2008 STREAMLINE ENGINEERING AND DESIGN INC. ALL RIGHTS RESERVED.

PRELIMINARY: NOT FOR CONSTRUCTION

KEVIN R. SORENSEN
S4469

ISSUE STATUS

△	DATE	DESCRIPTION	REV.
	11/12/21	ZD 90%	I.M.
	12/23/21	ZD 100%	S.D.
	08/24/22	CLIENT REV	C.T.C.
	08/02/23	CLIENT REV	S.B.D.
	10/18/23	CLIENT REV	S.B.D.
	–	–	–

DRAWN BY: S. DANIELS

CHECKED BY: J. GRAY

APPROVED BY: –

DATE: 10/18/23

SHEET TITLE:

SITE PLAN

SHEET NUMBER:

A-1

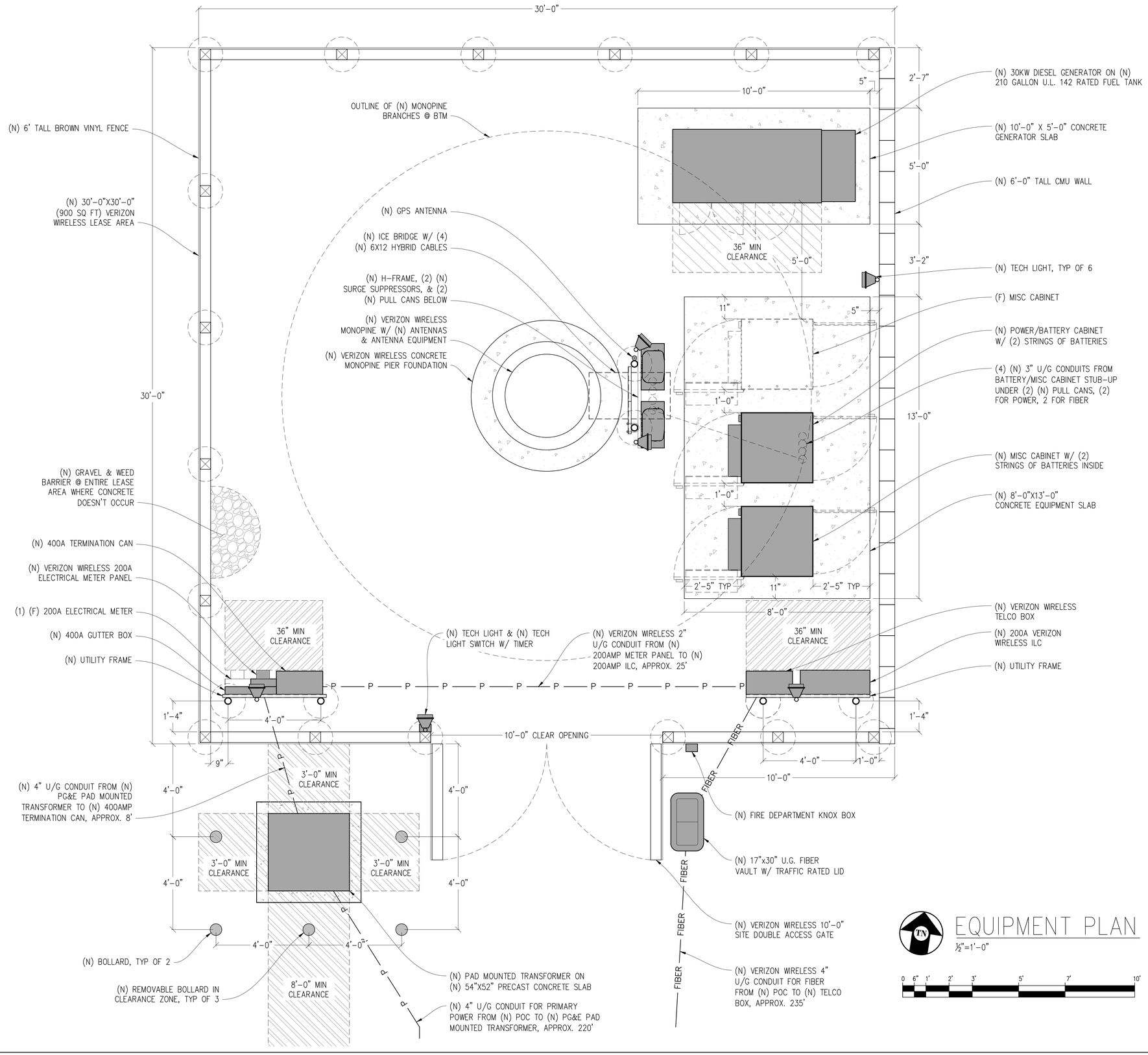

EQUIPMENT PLAN

½"=1'-0"

0 6" 1' 2' 3' 5' 7' 10'

NOTICE

NEW MONOPINE TO BE ANALYZED BY OTHERS. STREAMLINE ENGINEERING & DESIGN INC. IS NOT RESPONSIBLE FOR THE EVALUATION OF THE NEW POLE, BASE PLATE, ANCHOR BOLTS, FOUNDATION OR ANTENNA/RRU MOUNT FRAMING & CONNECTIONS FOR THE EXISTING AND NEW LOADING CONDITIONS.

HONKERS

223 CLARK AVENUE
YUBA CITY, CA 95991

verizon

2770 SHADELANDS DRIVE, BLDG 11
WALNUT CREEK, CA 94598

Streamline Engineering and Design, Inc.
8445 Sierra College Blvd, Suite E Granite Bay, CA 95746
Contact: Kevin Sorensen Phone: 916-660-1930
E-Mail: kevin@streamlineeng.com Fax: 916-660-1941

THESE PLANS AND SPECIFICATIONS, AS INSTRUMENTS OF SERVICE, ARE AND SHALL REMAIN THE PROPERTY OF STREAMLINE ENGINEERING AND DESIGN INC. THE REPRODUCTION, IN WHOLE OR IN PART, OR USE OF THE DESIGNS AND DRAWINGS AND SPECIFICATIONS SHALL NOT BE USED BY ANY PERSON OR ENTITY ON OTHER PROJECTS WITH OUT PRIOR WRITTEN CONSENT OF THE ENGINEER. Copyright © 2005 STREAMLINE ENGINEERING AND DESIGN INC. ALL RIGHTS RESERVED.

PRELIMINARY: NOT FOR CONSTRUCTION

KEVIN R. SORENSEN
S4469

ISSUE STATUS

△	DATE	DESCRIPTION	REV.
	11/12/21	ZD 90%	I.M.
	12/23/21	ZD 100%	S.D.
	08/24/22	CLIENT REV	C.T.C.
	08/02/23	CLIENT REV	S.B.D.
	10/18/23	CLIENT REV	S.B.D.
	–	–	–

DRAWN BY: S. DANIELS

CHECKED BY: J. GRAY

APPROVED BY: –

DATE: 10/18/23

SHEET TITLE:

EQUIPMENT PLAN

SHEET NUMBER:

A-2

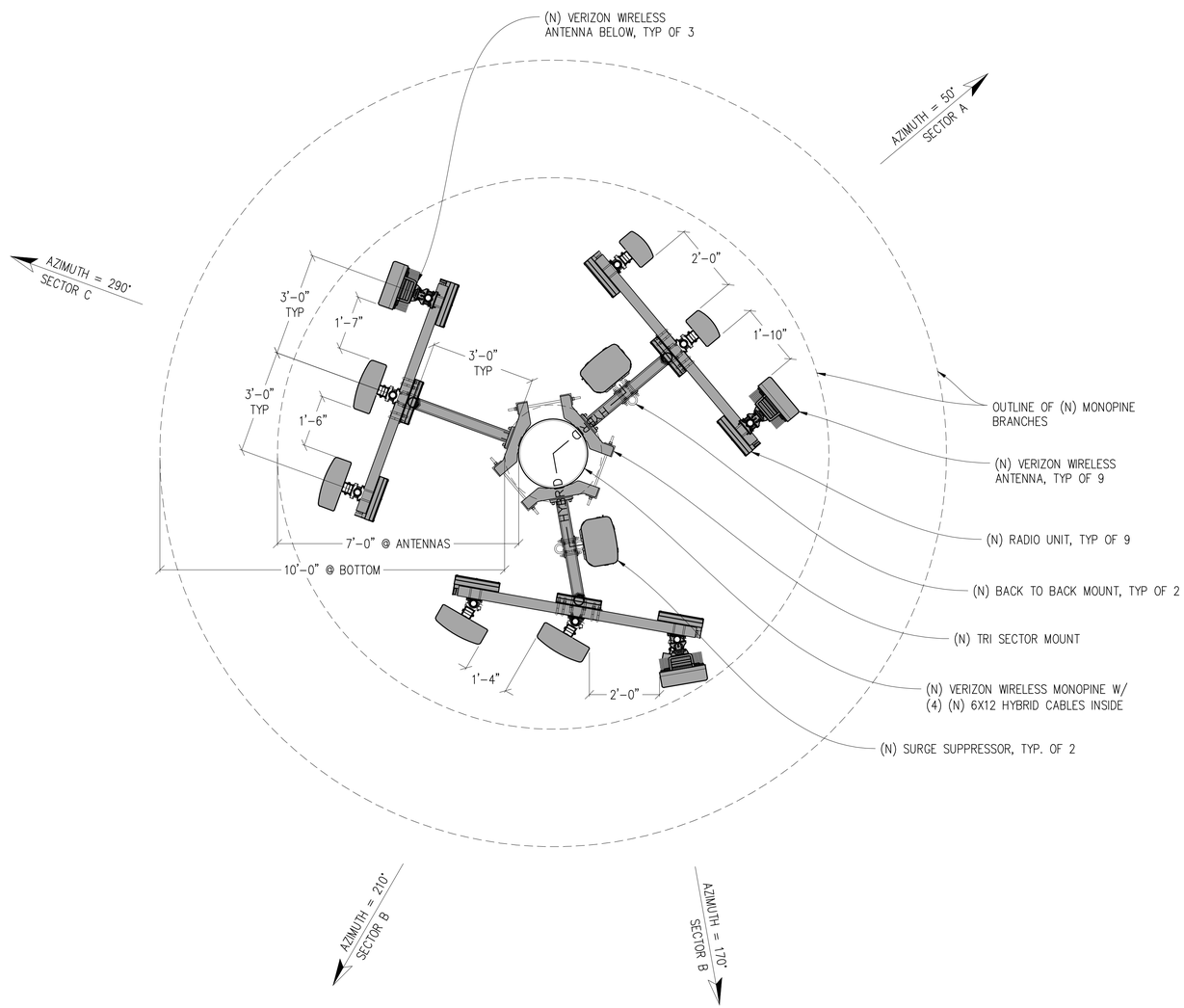

TN

ANTENNA PLAN

½"=1'-0"

0 6" 1' 2' 3' 5' 7' 10'

NOTE:
1. ALL (N) ANTENNAS, ANTENNA MOUNTS, ANTENNA EQUIPMENT, & EXPOSED CABLES TO BE PAINTED TO MATCH (E) MONOPINE & BE FULLY WITHIN MONOPINE BRANCH RADIUS.
2. PAINT OR 3M FILM WRAP ALL (N) ANTENNAS TO MATCH (E) MONOPINE

NOTICE

NEW MONOPINE TO BE ANALYZED BY OTHERS. STREAMLINE ENGINEERING & DESIGN INC. IS NOT RESPONSIBLE FOR THE EVALUATION OF THE NEW POLE, BASE PLATE, ANCHOR BOLTS, FOUNDATION OR ANTENNA/RRU MOUNT FRAMING & CONNECTIONS FOR THE EXISTING AND NEW LOADING CONDITIONS.

HONKERS

223 CLARK AVENUE
YUBA CITY, CA 95991

verizon

2770 SHADELANDS DRIVE, BLDG 11
WALNUT CREEK, CA 94598

Streamline Engineering and Design, Inc.
8445 Sierra College Blvd, Suite E Granite Bay, CA 95746
Contact: Kevin Sorensen Phone: 916-660-1930
E-Mail: kevin@streamlineeng.com Fax: 916-660-1941

THESE PLANS AND SPECIFICATIONS, AS INSTRUMENTS OF SERVICE, ARE AND SHALL REMAIN THE PROPERTY OF STREAMLINE ENGINEERING & DESIGN, INC. WHEN THEY HAVE BEEN PREPARED FOR THE PROJECT DESCRIBED HEREIN. THESE DRAWINGS AND SPECIFICATIONS SHALL NOT BE USED BY ANY PERSON OR ENTITY ON OTHER PROJECTS WITH OUT PRIOR WRITTEN CONSENT OF THE ENGINEER. Copyright © 2006 STREAMLINE ENGINEERING AND DESIGN INC. ALL RIGHTS RESERVED.

PRELIMINARY:
NOT FOR
CONSTRUCTION

KEVIN R. SORENSEN
S4469

ISSUE STATUS

△	DATE	DESCRIPTION	REV.
	11/12/21	ZD 90%	I.M.
	12/23/21	ZD 100%	S.D.
	08/24/22	CLIENT REV	C.T.C.
	08/02/23	CLIENT REV	S.B.D.
	10/18/23	CLIENT REV	S.B.D.
	–	–	–

DRAWN BY: S. DANIELS

CHECKED BY: J. GRAY

APPROVED BY: –

DATE: 10/18/23

SHEET TITLE:

ANTENNA PLAN

SHEET NUMBER:

A-3

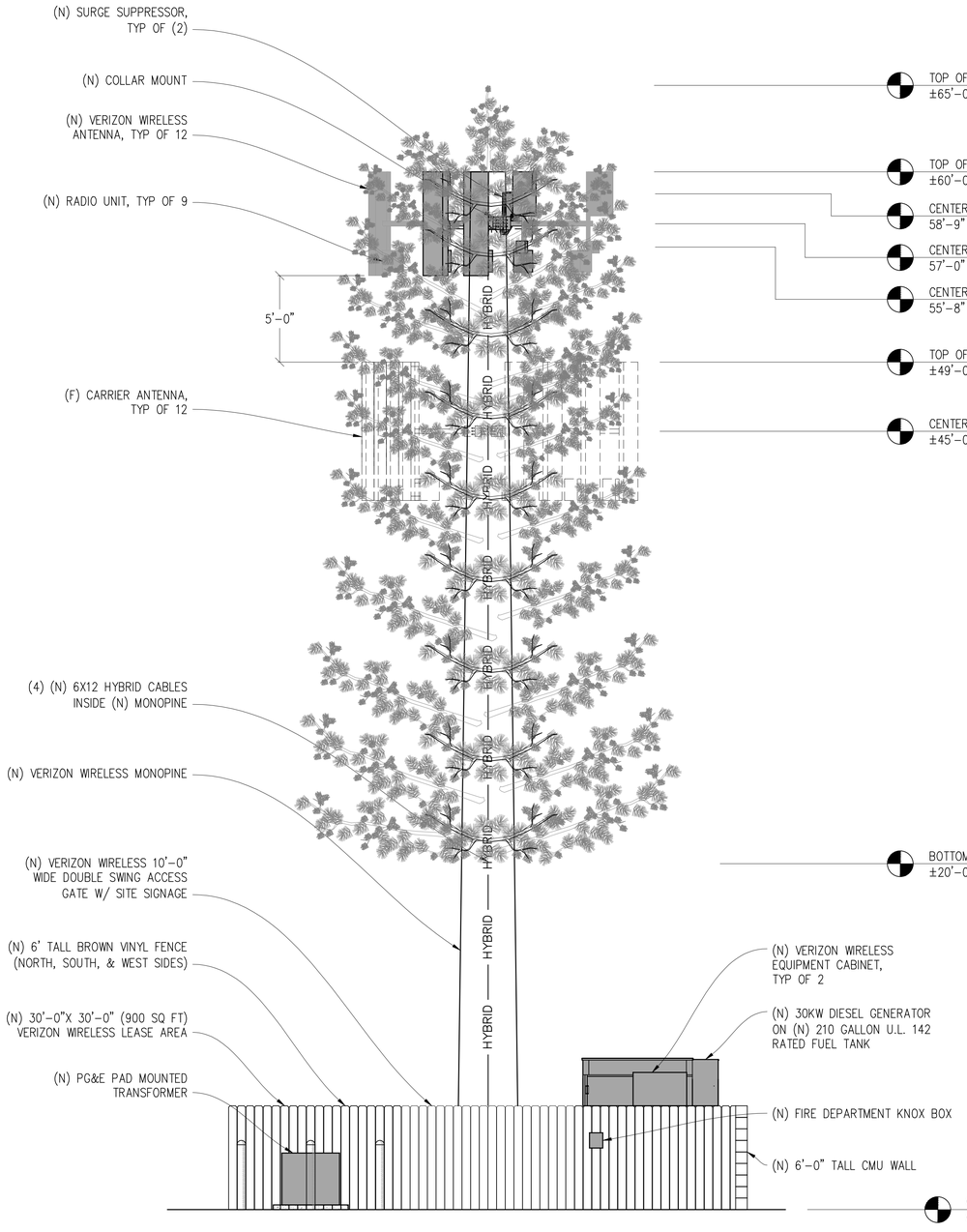

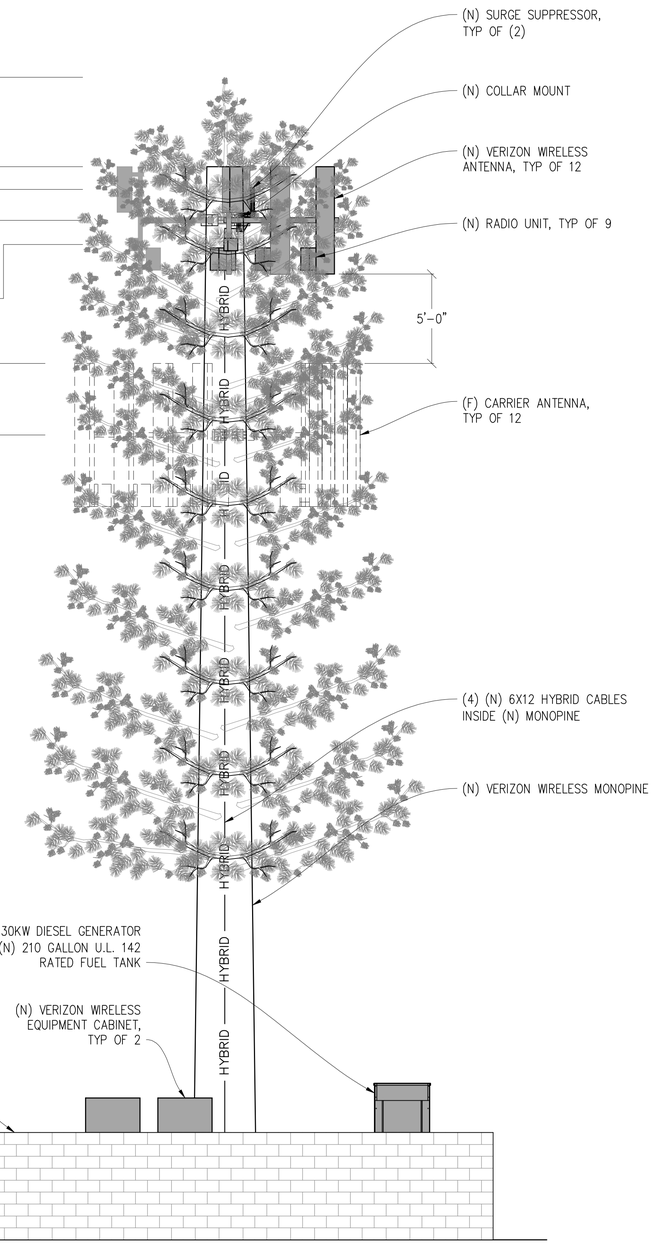

TOP OF (N) VERIZON WIRELESS MONOPINE BRANCHES ±65'-0" A.G.L.

TOP OF (N) VERIZON WIRELESS MONOPINE STEEL & (N) ANTENNAS ±60'-0" A.G.L.

CENTER LINE OF (N) VERIZON WIRELESS ANTENNAS 58'-9"

CENTER LINE OF (N) VERIZON WIRELESS ANTENNAS 57'-0"

CENTER LINE OF (N) VERIZON WIRELESS ANTENNAS 55'-8"

TOP OF (F) CARRIER ANTENNAS ±49'-0" A.G.L.

CENTER LINE OF (F) CARRIER ANTENNAS ±45'-0" A.G.L.

BOTTOM OF (N) MONOPINE BRANCHES ±20'-0" A.G.L.

GROUND LEVEL 0'-0"

SOUTH ELEVATION

¼"=1'-0"

0 1' 2' 4' 6' 10' 14' 20'

EAST ELEVATION

¼"=1'-0"

0 1' 2' 4' 6' 10' 14' 20'

HONKERS

223 CLARK AVENUE
YUBA CITY, CA 95991

verizon

2770 SHADELANDS DRIVE, BLDG 11
WALNUT CREEK, CA 94598

Streamline Engineering and Design, Inc.
8445 Sierra College Blvd. Suite E Granite Bay, CA 95746
Contact: Kevin Sorensen Phone: 916-660-1930
E-Mail: kevin@streamlineeng.com Fax: 916-660-1941

THESE PLANS AND SPECIFICATIONS, AS INSTRUMENTS OF SERVICE, ARE AND SHALL REMAIN THE PROPERTY OF STREAMLINE ENGINEERING AND DESIGN INC. THE VISUAL PROPERTIES EMBODIED IN THESE DRAWINGS AND SPECIFICATIONS SHALL NOT BE USED BY ANY PERSON OR ENTITY ON OTHER PROJECTS WITH OUT PRIOR WRITTEN CONSENT OF THE ENGINEER. Copyright 2006 STREAMLINE ENGINEERING AND DESIGN INC. ALL RIGHTS RESERVED.

PRELIMINARY: NOT FOR CONSTRUCTION

KEVIN R. SORENSEN
S4469

ISSUE STATUS

△	DATE	DESCRIPTION	REV.
	11/12/21	ZD 90%	I.M.
	12/23/21	ZD 100%	S.D.
	08/24/22	CLIENT REV	C.T.C.
	08/02/23	CLIENT REV	S.B.D.
	10/18/23	CLIENT REV	S.B.D.
	–	–	–

DRAWN BY: S. DANIELS

CHECKED BY: J. GRAY

APPROVED BY: –

DATE: 10/18/23

SHEET TITLE:

ELEVATIONS

SHEET NUMBER:

A-4

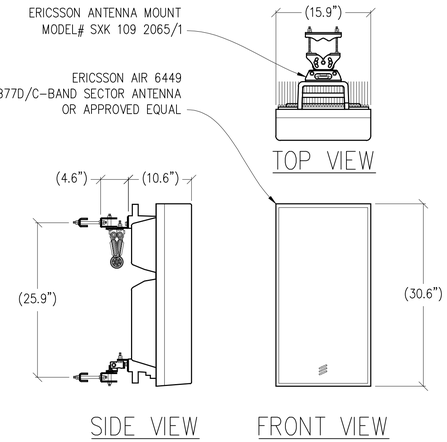

1 ANTENNA DETAIL
1"=1'-0" MAX WEIGHT W/ MOUNT: 88 LBS

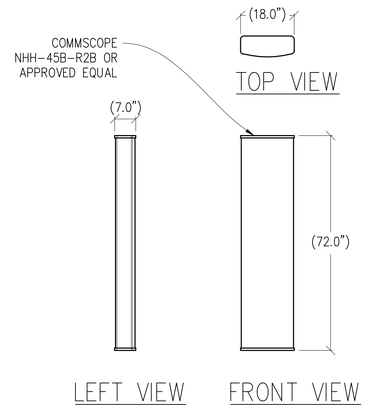

2 ANTENNA DETAIL
½"=1'-0" MAX WEIGHT: 73.6 LBS

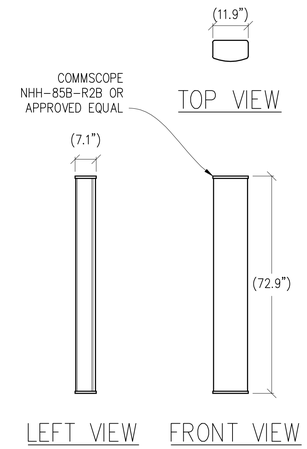

3 ANTENNA DETAIL
½"=1'-0" MAX WEIGHT: 43.7 LBS

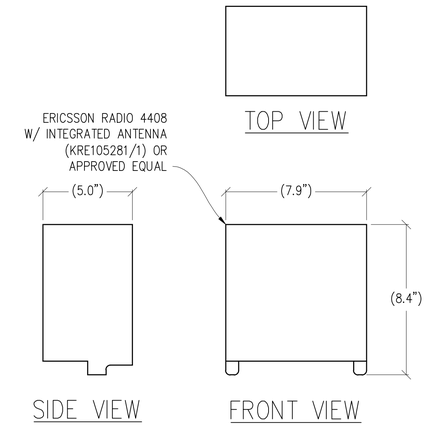

4 CBRS ANTENNA DETAIL
3"=1'-0" MAX WEIGHT 11.1 LBS

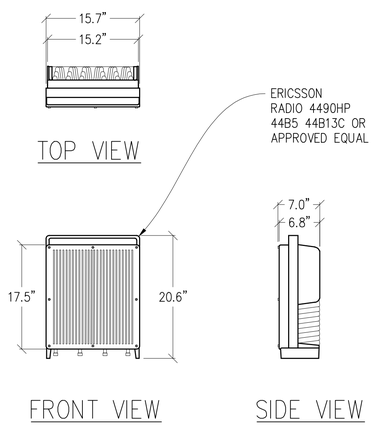

5 RADIO 4490HP DETAIL
1"=1'-0" MAX WEIGHT: 68.4 LBS

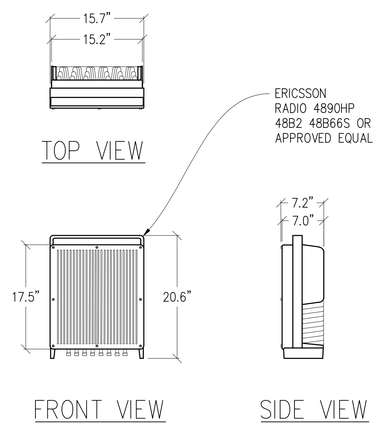

6 RADIO 4890HP DETAIL
1"=1'-0" MAX WEIGHT: 69.5 LBS

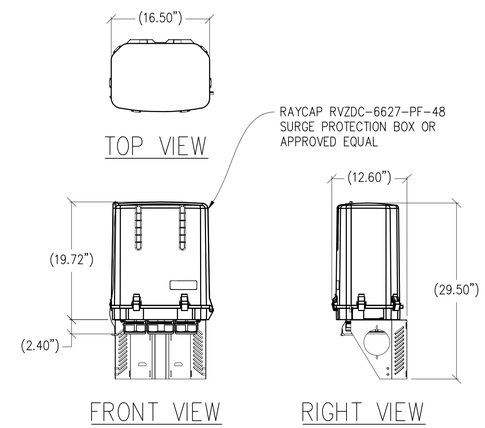

7 SURGE PROTECTION BOX
1"=1'-0" MAX WEIGHT: 32.0 LBS

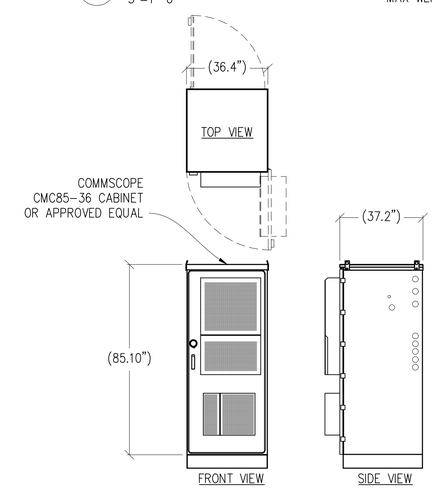

8 CABINET DETAIL
⅜"=1'-0" MAX WEIGHT: 2352 LBS

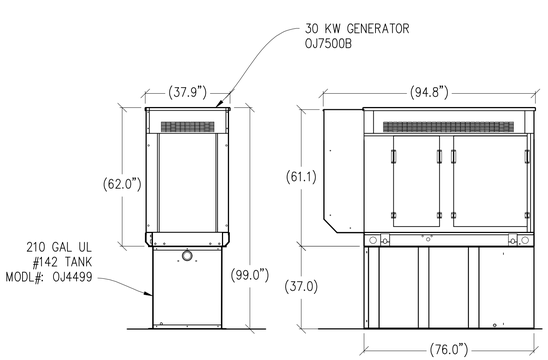

9 30KW GENERATOR DETAIL
⅜"=1'-0" FULL MAX WEIGHT: 4,550 LBS

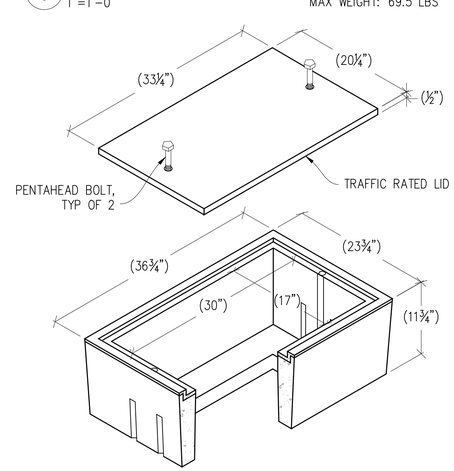

10 B1730 HANDHOLE DETAIL
NOT TO SCALE

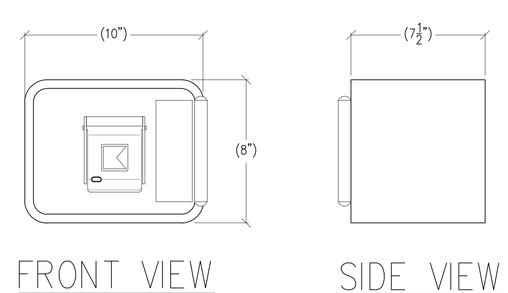

11 KNOX-BOX 3200 DETAIL
3"=1'-0"

HONKERS

223 CLARK AVENUE
YUBA CITY, CA 95991

verizon

2770 SHADELANDS DRIVE, BLDG 11
WALNUT CREEK, CA 94598

Streamline Engineering and Design, Inc.
8445 Sierra College Blvd, Suite E Granite Bay, CA 95746
Contact: Kevin Sorensen Phone: 916-660-1930
E-Mail: kevin@streamlineeng.com Fax: 916-660-1941

THESE PLANS AND SPECIFICATIONS, AS INSTRUMENTS OF SERVICE, ARE AND SHALL REMAIN THE PROPERTY OF STREAMLINE ENGINEERING AND DESIGN, INC. WHETHER THE PROJECT FOR WHICH THEY ARE MADE IS EXECUTED OR NOT. THESE DRAWINGS AND SPECIFICATIONS SHALL NOT BE USED BY ANY PERSON OR ENTITY ON OTHER PROJECTS WITHOUT PRIOR WRITTEN CONSENT OF THE ENGINEER. Copyright 2005 STREAMLINE ENGINEERING AND DESIGN INC. ALL RIGHTS RESERVED.

PRELIMINARY:
NOT FOR
CONSTRUCTION

KEVIN R. SORENSEN
S4469

ISSUE STATUS

△	DATE	DESCRIPTION	REV.
	11/12/21	ZD 90%	I.M.
	12/23/21	ZD 100%	S.D.
	08/24/22	CLIENT REV	C.T.C.
	08/02/23	CLIENT REV	S.B.D.
	10/18/23	CLIENT REV	S.B.D.
	–	–	–

DRAWN BY: S. DANIELS

CHECKED BY: J. GRAY

APPROVED BY: –

DATE: 10/18/23

SHEET TITLE:

DETAILS

SHEET NUMBER:

A-5

EXHIBIT B

CITY OF YUBA CITY
CONDITIONS OF APPROVAL
USE PERMIT 23-02
DECEMBER 13, 2023

HONKERS CELL TOWER
APN: 53-174-001

NOTICE TO PROJECT APPLICANT

In accordance with the provisions of Government Code Section 66020(d)(1), the imposition of fees, dedication, reservations or exactions for this project are subject to protest by the project applicant at the time of approval or conditional approval of the development or within ninety (90) calendar days after the date of imposition of fees, dedications, reservation, or exactions imposed on the development project. This notice does not apply to those fees, dedications, reservations, or exactions which were previously imposed and duly noticed; or, where no notice was previously required under the provisions of Government Code Section 66020(d)(1) in effect before January 1, 1997.

IMPORTANT: PLEASE READ CAREFULLY

Please note that this project is subject to a variety of discretionary conditions of approval. These include conditions based on adopted City plans and policies, those determined through the use permit review and environmental assessment essential to mitigate adverse effects on the environment including the health, safety, and welfare of the community, and recommended conditions for development that are not essential to health, safety, and welfare, but would on the whole enhance the project and its relationship to the neighborhood and environment.

Discretionary conditions of approval may be appealed. All code requirements, however, are mandatory and may only be modified by variance, provided the findings can be made.

All discretionary conditions of approval will ultimately be deemed mandatory unless appealed by the applicant to the City Council within 10 days after the decision by the Planning Commission. In the event you wish to appeal the Planning Commission's decision or discretionary conditions of approval, you may do so by filing a written appeal with the City Clerk. The appeal shall state the grounds for the appeal and wherein the Commission failed to conform to the requirements of the zoning ordinance. This should include identification of the decision or action appealed and specific reasons why you believe the decision or action appealed should not be upheld.

Approval of this use permit shall be considered null and void in the event of failure by the applicant and/or the authorized representative, architect, engineer, or designer to disclose and delineate all facts and information relating to the subject property and the proposed development.

Approval of this use permit may become null and void in the event that development is not completed in accordance with all the conditions and requirements imposed on this use permit, the zoning ordinance, and all City standards and specifications. This use permit is granted, and the conditions imposed, based upon the application submittal provided by the applicant, including any operational statement. The application is material to the issuance of

this use permit. Unless the conditions of approval specifically require operation inconsistent with the application, a new or revised use permit is required if the operation of this establishment changes or becomes inconsistent with the application. Failure to operate in accordance with the conditions and requirements imposed may result in revocation of the use permit or any other enforcement remedy available under the law. The City shall not assume responsibility for any deletions or omissions resulting from the use permit review process or for additions or alterations to any construction or building plans not specifically submitted and reviewed and approved pursuant to this use permit or subsequent amendments or revisions. These conditions are conditions imposed solely upon the use permit, and are not conditions imposed on the City or any third party. Likewise, imposition of conditions to ensure compliance with federal, state, or local laws and regulations does not preclude any other type of compliance enforcement.

These conditions are applicable to any person or entity making use of this use permit, and references to “developer” or “applicant” herein also include any applicant, property owner, owner, leasee, operator, or any other person or entity making use of this use permit.

CONDITIONS OF APPROVAL

1. To the furthest extent allowed by law, applicant/property owner shall indemnify, hold harmless and defend City and each of its officers, officials, employees, consultants, agents and volunteers from any and all loss, liability, fines, penalties, forfeitures, damages and costs (including attorney's fees, litigation expenses and administrative record preparation costs) arising from, resulting from, or in connection with any Third-Party Action (as hereinafter defined). The term “Third Party Action” collectively means any legal action or other proceeding instituted by (i) a third party or parties, or (ii) a governmental body, agency or official other than the City, that: (a) challenges or contests any or all of these Conditions of Approval or any approval associated with entitlements associated with the project (collectively “Approvals”); or (b) claims or alleges a violation of CEQA or another law in connection with the Approvals by the City, or the grant, issuance or approval by the City of any or all Approvals. Applicant’s/property owner’s obligations under this paragraph shall apply regardless of whether City or any of its officers, officials, employees, consultants, agents or volunteers are actively or passively negligent, but shall not apply to any loss, liability, fines, penalties forfeitures, costs or damages caused solely by the active negligence or willful misconduct of the City or any of its officers, officials, employees, agents or volunteers. The provisions of this section shall survive any termination, revocation, overturn, or expiration of an approval.

   Nothing in this section shall obligate the City to defend any claim and the City shall not be required to pay or perform any settlement arising from any such claim not defended by the City, unless the City approves the settlement in writing. Nor shall the City be prohibited from independently defending any claim, and if the City does decide to independently defend a claim, the applicant/property owner shall be responsible for City’s attorneys’ fees, expenses of litigation, and costs for that independent defense, including the costs of preparing any required administrative record. Applicant/property owner shall submit all documents filed in the Third-Party Action for review and approval of the City Attorney prior to filing of said documents on behalf of the City.

   The City may, at any time, require the applicant to reimburse the City for costs that have been, or which the City reasonably anticipates will be, incurred by the City

during the course of processing or defending any Third-Party Actions. The City shall provide applicant/property owner with an invoice detailing all reasonable costs incurred. Applicant/property owner shall tender to the City payment-in-full of all reasonable and necessary costs within thirty (30) days from the date upon the invoice. Applicant/property owner shall contact the City within a reasonable time to arrange any extension of the thirty (30) day time period for payment-in-full of the invoiced amount. Applicant/property owner further acknowledges and agrees, failure to timely tender payment-in-full to the City shall be considered a breach and non-compliance with the conditions of approval for the project. Applicant/property owner shall also be required, upon request of the City, to deposit two month's estimated costs anticipated by the City to be incurred, which may be used by the City as a draw down account to maintain a positive balance pending tender of payment by Applicant/property owner as noted herein.

2. Approval of Use Permit (UP) 23-02 shall be null and void without further action if: 1) the project has not been substantially commenced within two years of the approval date of UP 23-02; or 2) that a request for an extension of time, pursuant to Section 8-5.7106 of the Yuba City Municipal Code (YCMC) has not been submitted to the City.

3. The telecommunications pole and ground equipment facility shall comply with all applicable City Design Guidelines and shall be developed and constructed substantially per the plans approved by the Planning Commission on December 13, 2023. The facility shall operate pursuant to the Project Description as described in the Planning Staff Report dated 12/13/2023, as approved by the Planning Commission.

4. The development and operation of the project shall comply with all CEQA mitigation measures identified in Environmental Assessment 23-09, dated November, 2023, and all previously applicable environmental documents that pertain to the project.

5. The applicant and/or owner is required to perform regular upkeep and maintenance of the total facility, including but not limited to the faux branches.

6. A five-foot wide planter shall be installed along the east and a portion of the southern property line that abuts the residentially zoned properties. The planter shall be planted with a hedge type plant, approved by the Development Services Director, that will provide at least a six-foot high visual barrier between this and the neighboring residential property. The hedge shall be maintained by the applicant and/or owner as provided in Sec.8-5.6003(b)(2) of the Zoning Regulations.

7. The driveway providing access to the lease area, as well as a dedicated parking space for the site must be paved of concrete and/or asphalt, or a material approved by the Public Works Director.

8. The development and operation of the project shall comply with all local, state, and federal codes (including Building and Fire codes) and local development standards.

    - The Developer or Representative shall obtain an Encroachment Permit from the City prior to performing any work within public rights of way.

9. Cross access easements shall be reserved in deeds or other acceptable format to facilitate all shared underground utilities, ingress and egress, parking, drainage, refuse collection, landscaping, and the maintenance thereof to the benefit of both parcels. The document is to be recorded and tied to the two parcels.

MITIGATION MEASURES

Aesthetics Mitigation Measure 1: An eight-foot-high solid screen shall be constructed around the perimeter of the leased site. The east wall shall consist of solid masonry, as required by Ordinance. The other three sides shall consist of a permanent solid material, as approved by the Development Services Director.

Aesthetics Mitigation Measure 2: The tower shall be painted dark brown or black.

Paleontological Mitigation Measure 1: This Mitigation Measure shall be placed as a note on the Demolition and Grading Plans. If paleontological resources are found, the construction manager shall halt all activity and immediately contact the Development Services Department at 530-822-4700.

Mitigation shall be conducted as follows:

1. Identify and evaluate paleontological resources by intense field survey where impacts are considered high;
2. Assess effects on identified sites;
3. Consult with the institutional/academic paleontologists conducting research investigations within the geological formations that are slated to be impacted;
4. Obtain comments from the researchers;
5. Comply with researchers' recommendations to address any significant adverse effects were determined by the City to be feasible.

In considering any suggested mitigation proposed by the consulting paleontologist, the City's Community Development Department Staff shall determine whether avoidance is necessary and feasible in light of factors such as the nature of the find, project design, costs, Specific or General Plan policies and land use assumptions, and other considerations. If avoidance is unnecessary or infeasible, other appropriate measures (e.g., data recovery) shall be instituted. Work may proceed on other parts of the project site while mitigation for paleontological resources is carried out.

Tribal Cultural Resources Mitigation 1: **Post Ground Disturbance** A minimum of seven days prior to beginning earthwork, clearing, and grubbing, or other soil disturbing activities, the applicant shall notify lead agency of the proposed earthwork start-date. The lead agency shall contact the United Auburn Indian Community (UAIC) with the proposed earthwork start-date and a UAIC Tribal Representative or Tribal Monitor shall be invited to inspect the project site, including any soil piles, trenches, or other disturbed areas, within the first five days of groundbreaking activity, or as appropriate for the type and size of the project. During this inspection, a UAIC Tribal Representative or Tribal Monitor may provide an on-site meeting for construction personnel information on TCRs and workers awareness brochure.

If any TCRs are encountered during this initial inspection, or during any subsequent construction activities, work shall be suspended within 100 feet of the find and measures included in the **Unanticipated Discoveries Mitigation Measure 2** shall be implemented. Preservation in place is the preferred alternative under CEQA and UAIC protocols, and every effort must be made to preserve the resources in place, including through project redesign.

The contractor shall implement any measures deemed by CEQA lead agency to be necessary and feasible to preserve in place, avoid, or minimize significant effects to the resources, including the use of paid Native American Monitor during ground disturbing activities.

Tribal Cultural Resources Mitigation 2: Unanticipated Discoveries: If any suspected TCRs are discovered during ground disturbing construction activities, all work shall cease within 100 feet of the find, or an agreed upon distance based on the project area and nature of the find. A Tribal Representative from a California Native American Tribe that is traditionally and culturally affiliated with a geographic area shall be immediately notified and shall determine if the find is a TCR (PRC 21074). The Tribal Representative will make recommendations for further evaluation and treatment as necessary.

Preservation in place is the preferred alternative under CEQA and UAIC protocols, and every effort must be made to preserve the resources in place, including through project redesign. Culturally appropriate treatment may be, but is not limited to, processing materials for reburial, minimizing handling of cultural objects, leaving objects in place within the landscape, returning objects to a location within the project area where they will not be subject to future impacts. The Tribe does not consider curation of TCR's to be appropriate or respectful and request that materials not be permanently curated, unless approved by the Tribe.

The contractor shall implement any measures deemed by the CEQA lead agency to be necessary and feasible to preserve in place, avoid, or minimize impacts to the resource, including but limited to, facilitating the appropriate tribal treatment of the find, as necessary. Treatment that preserves or restores the cultural character and integrity of a Tribal Cultural Resource may include Tribal monitoring, culturally appropriate recovery of cultural objects, and reburial of cultural objects or cultural soil.

Work at the discovery location cannot resume until all necessary investigation and evaluation of the discovery under the requirements of CEQA, including AB 523 has been satisfied.

ATTACHMENT 3

Honkers
223 Clark Avenue
Yuba City, CA 95991

verizon

Site # 442943

Aerial photograph showing the viewpoints for the photosimulations.

© Copyright 2023 Previsualists Inc. • www.photosim.com • Any modification is strictly prohibited. Printing letter size or larger is permissible. This photosimulation is based upon information provided by the project applicant.

Photosimulation of the view looking southeast from the intersection of Clark Ave and Clinton Street.

Honkers
223 Clark Avenue
Yuba City, CA 95991

verizon

Site # 442943

© Copyright 2022 Previsualists Inc. • www.photosim.com • Any modification is strictly prohibited. Printing letter size or larger is permissible. This photosimulation is based upon information provided by the project applicant.

Honkers
223 Clark Avenue
Yuba City, CA 95991

verizon

Site # 442943

Photosimulation of the view looking due east from directly across Clark Avenue.

© Copyright 2022 Previsualists Inc. • www.photosim.com • Any modification is strictly prohibited. Printing letter size or larger is permissible. This photosimulation is based upon information provided by the project applicant.

Honkers
223 Clark Avenue
Yuba City, CA 95991

verizon

Site # 442943

Photosimulation of the view looking north from Julie Drive, neartest the site.

© Copyright 2022 Previsualists Inc. • www.photosim.com • Any modification is strictly prohibited. Printing letter size or larger is permissible. This photosimulation is based upon information provided by the project applicant.

Honkers
223 Clark Avenue
Yuba City, CA 95991

verizon

Site # 442943

Photosimulation of the view looking southwest from Clinton Street.

© Copyright 2022 Previsualists Inc. • www.photosim.com • Any modification is strictly prohibited. Printing letter size or larger is permissible. This photosimulation is based upon information provided by the project applicant.

ATTACHMENT 4

700 LTE Coverage

Confidential and proprietary materials for authorized Verizon personnel and outside agencies only. Use, disclosure or distribution of this material is not permitted to any unauthorized persons or third parties except by written agreement.

Existing Serving Site/Sector

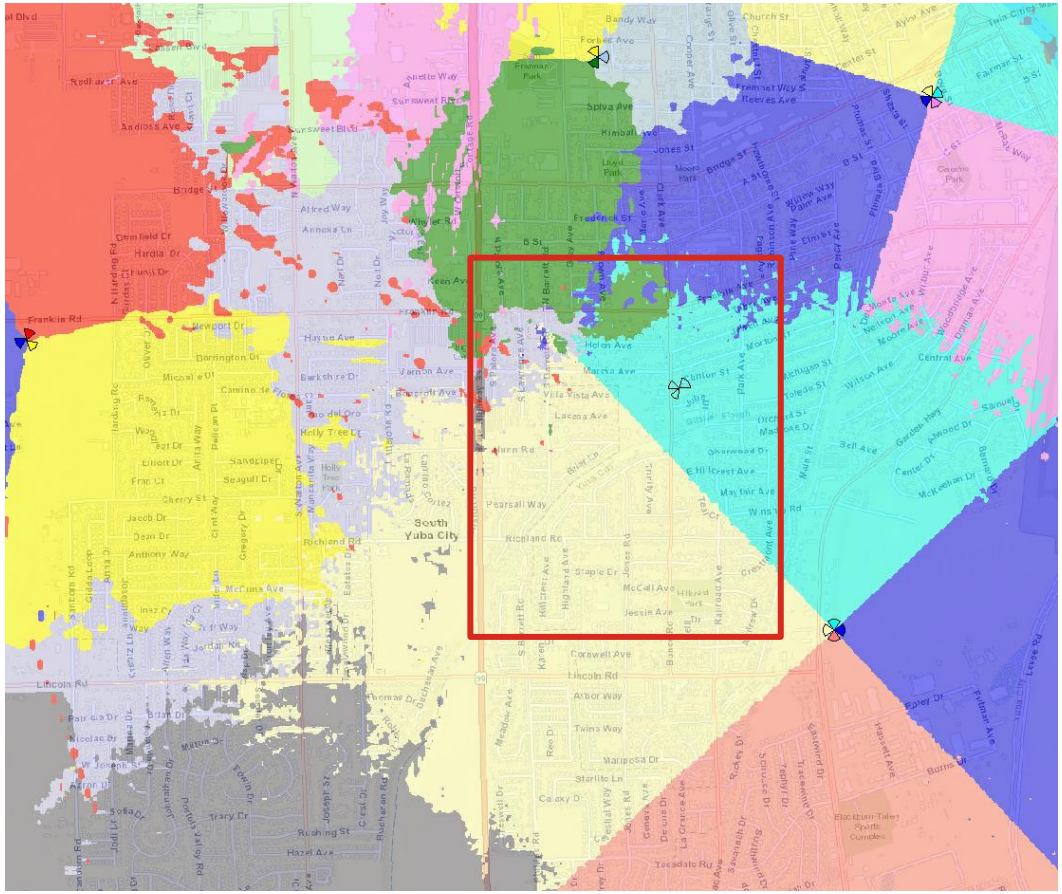

- Honkers site is for both coverage and usage offload

- Linda Airport site is the only serving site to the communities:
  - Yuba City High school
  - Park Ave Elem School
  - St Isidore Catholic School
  - South Yuba City Commercials
  - Dense residential areas

- Sector 1 & 4 of Linda Airport Site serves about 85% of these communities.

verizon

Confidential and proprietary materials for authorized Verizon personnel and outside agencies only. Use, disclosure or distribution of this material is not permitted to any unauthorized persons or third parties except by written agreement.

Existing 700 Coverage

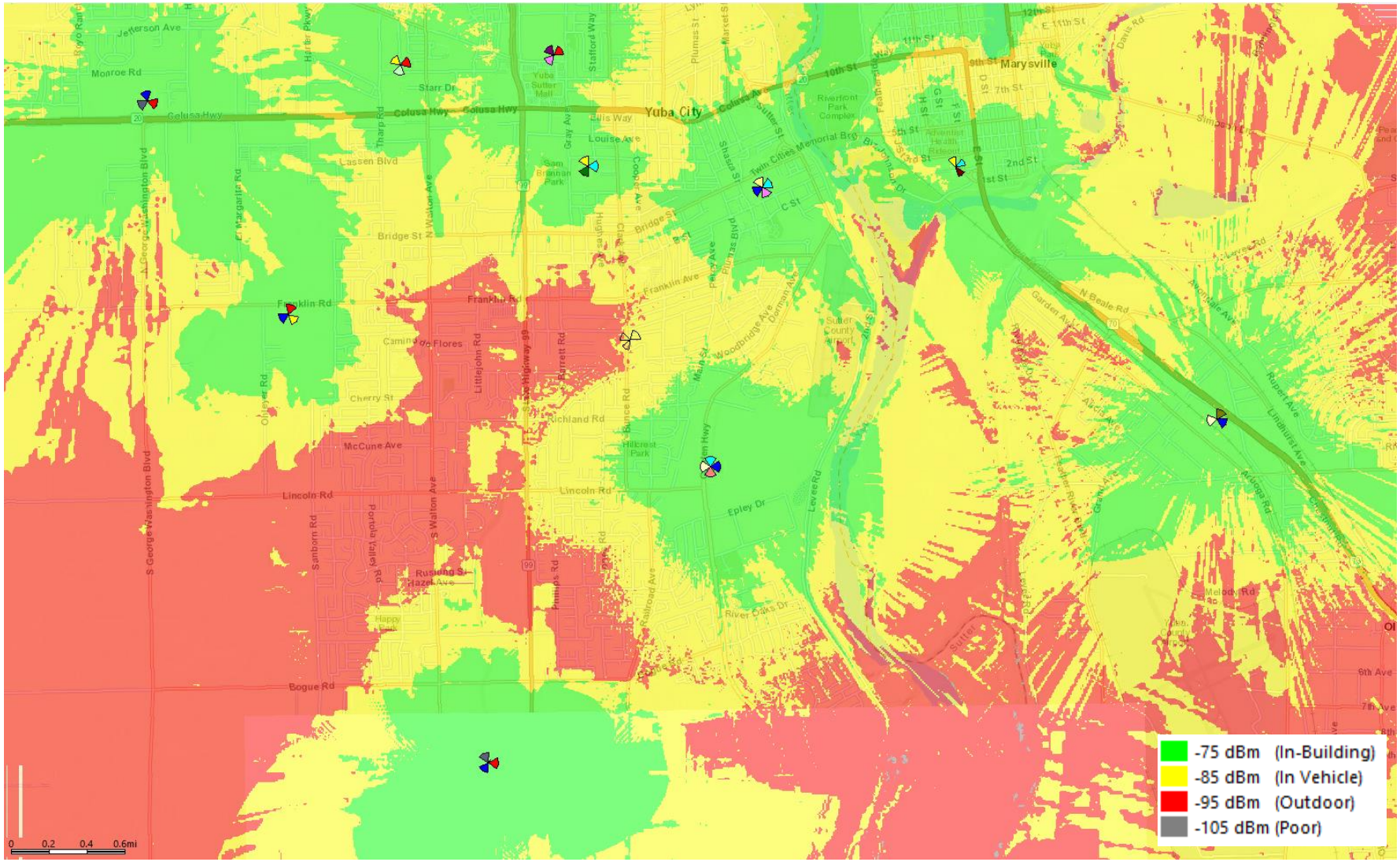
-75 dBm (In-Building)
-85 dBm (In Vehicle)
-95 dBm (Outdoor)
-105 dBm (Poor)
Yuba City
Marysville
Colusa Hwy
Franklin Rd
Lincoln Rd
McCune Ave
Bogue Rd
Bridge St
Lassen Blvd
Monroe Rd
Jefferson Ave
Starr Dr
Stafford Way
Ellis Way
Louise Ave
Tharp Rd
Gray Ave
Sutter St
Shasta St
Twin Cities Memorial Brg
C St
Plumas St
Feather River Blvd
10th St
9th St
7th St
5th St
2nd St
1st St
11th St
12th St
E 11th St
Davis Rd
Simpson Ln
N Beale Rd
Garden Ave
Wendale Ave
Rupert Ave
Lindhurst Ave
Arboga Rd
Melody Rd
Levee Rd
Epley Dr
River Oaks Dr
Woodbridge Ave
Dunham Ave
Main St
Bounce Rd
Hillcrest Park
Richland Rd
Cherry St
Camino Flores
Littlejohn Rd
Burnett Rd
Pennsylvania Ave
Railroad Ave
Sanborn Rd
S Walton Ave
N Walton Ave
Olivehurst Rd
S George Washington Blvd
E Margarita Rd
Hilfiker Pkwy
Pierce Rd
Rusuing St
Hazel Ave
Happy
Sutter County Airport
Sutter
Yuba Sutter Mall
Sam Brannan Park
Hughes Ave
Cooper Ave
Clark Ave
Pierce Ave
Plumas Blvd
Stafford Way
Gray Ave
Tharp Rd
Lassen Blvd
Bridge St
Franklin Rd
Cherry St
Richland Rd
McCune Ave
Lincoln Rd
Bogue Rd
Epley Dr
River Oaks Dr
Levee Rd
Sutter St
Shasta St
Plumas St
Feather River Blvd
Garden Ave
Wendale Ave
Rupert Ave
Lindhurst Ave
Arboga Rd
Melody Rd
Davis Rd
Simpson Ln
N Beale Rd
Woodbridge Ave
Dunham Ave
Main St
Bounce Rd
Hillcrest Park
Camino Flores
Littlejohn Rd
Burnett Rd
Pennsylvania Ave
Railroad Ave
Sanborn Rd
S Walton Ave
N Walton Ave
Olivehurst Rd
S George Washington Blvd
E Margarita Rd
Hilfiker Pkwy
Pierce Rd
Rusuing St
Hazel Ave
Sutter County Airport
Sutter
Yuba Sutter Mall
Sam Brannan Park
Hughes Ave
Cooper Ave
Clark Ave

Predicted 700 Coverage With Honkers

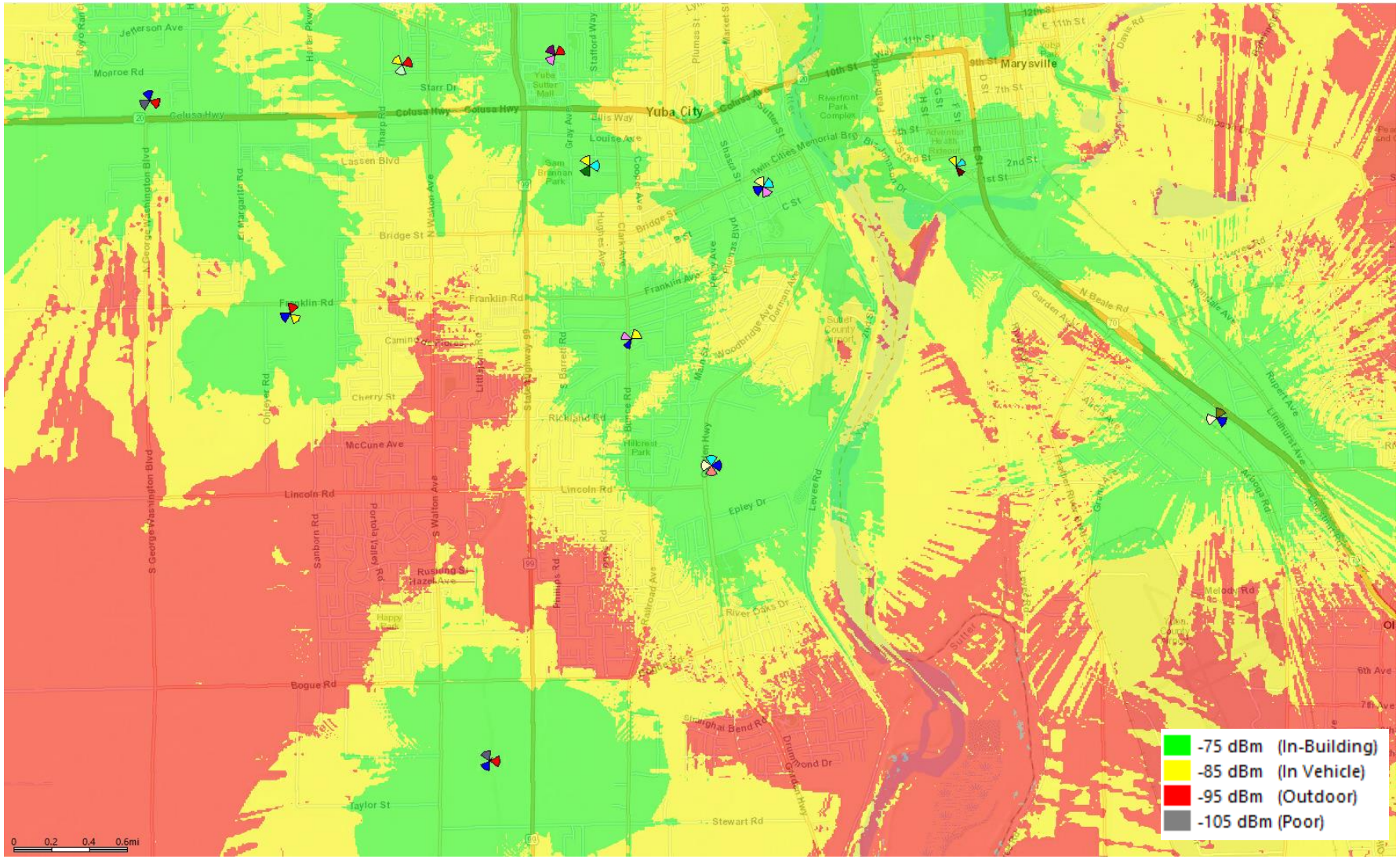

verizon

Confidential and proprietary materials for authorized Verizon personnel and outside agencies only. Use, disclosure or distribution of this material is not permitted to any unauthorized persons or third parties except by written agreement.

Existing 700 Best Server

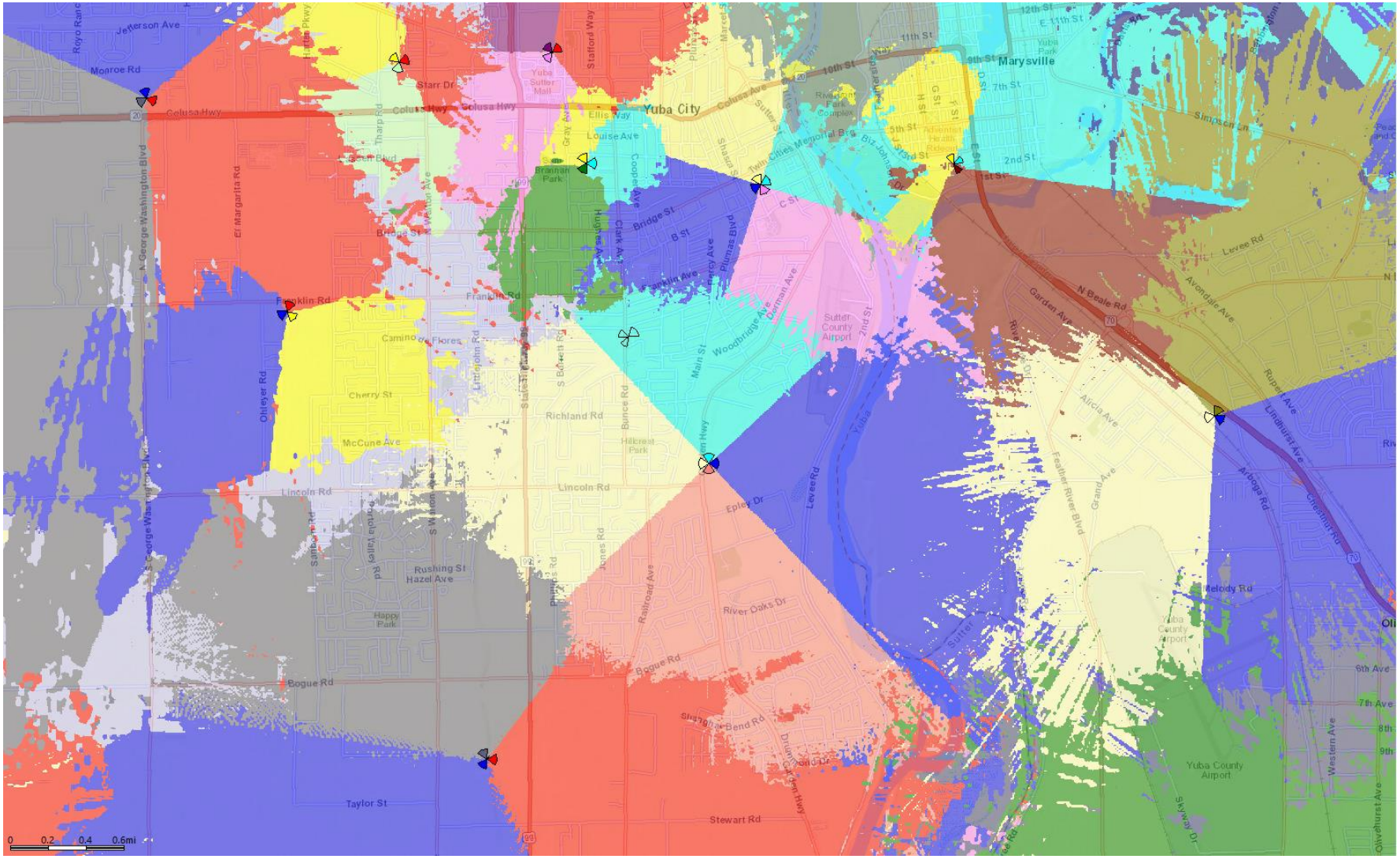

verizon

Confidential and proprietary materials for authorized Verizon personnel and outside agencies only. Use, disclosure or distribution of this material is not permitted to any unauthorized persons or third parties except by written agreement.

700 Best Server With Honkers

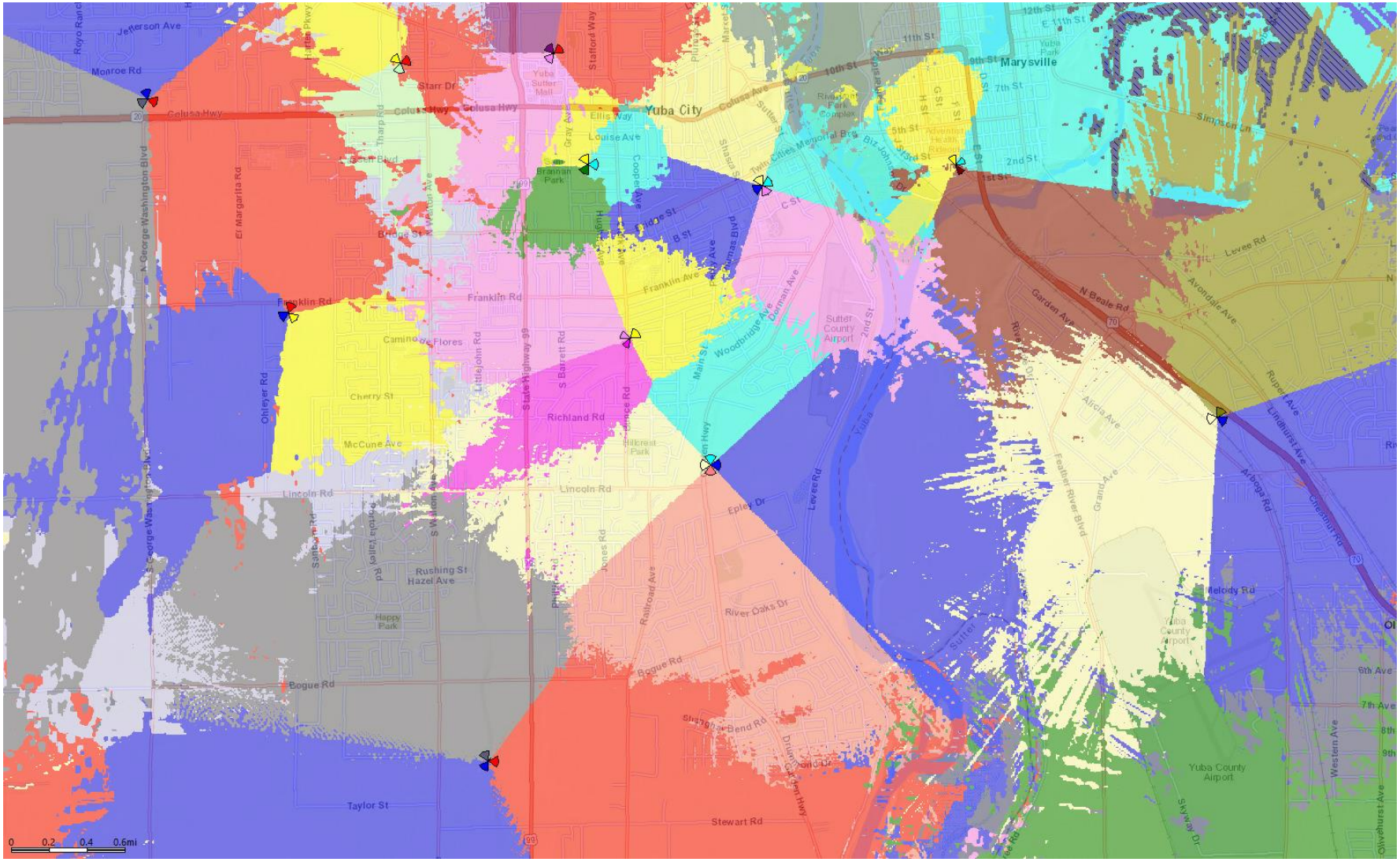

verizon

Confidential and proprietary materials for authorized Verizon personnel and outside agencies only. Use, disclosure or distribution of this material is not permitted to any unauthorized persons or third parties except by written agreement.

AWS Coverage

verizon

Confidential and proprietary materials for authorized Verizon personnel and outside agencies only. Use, disclosure or distribution of this material is not permitted to any unauthorized persons or third parties except by written agreement.

Existing AWS Coverage

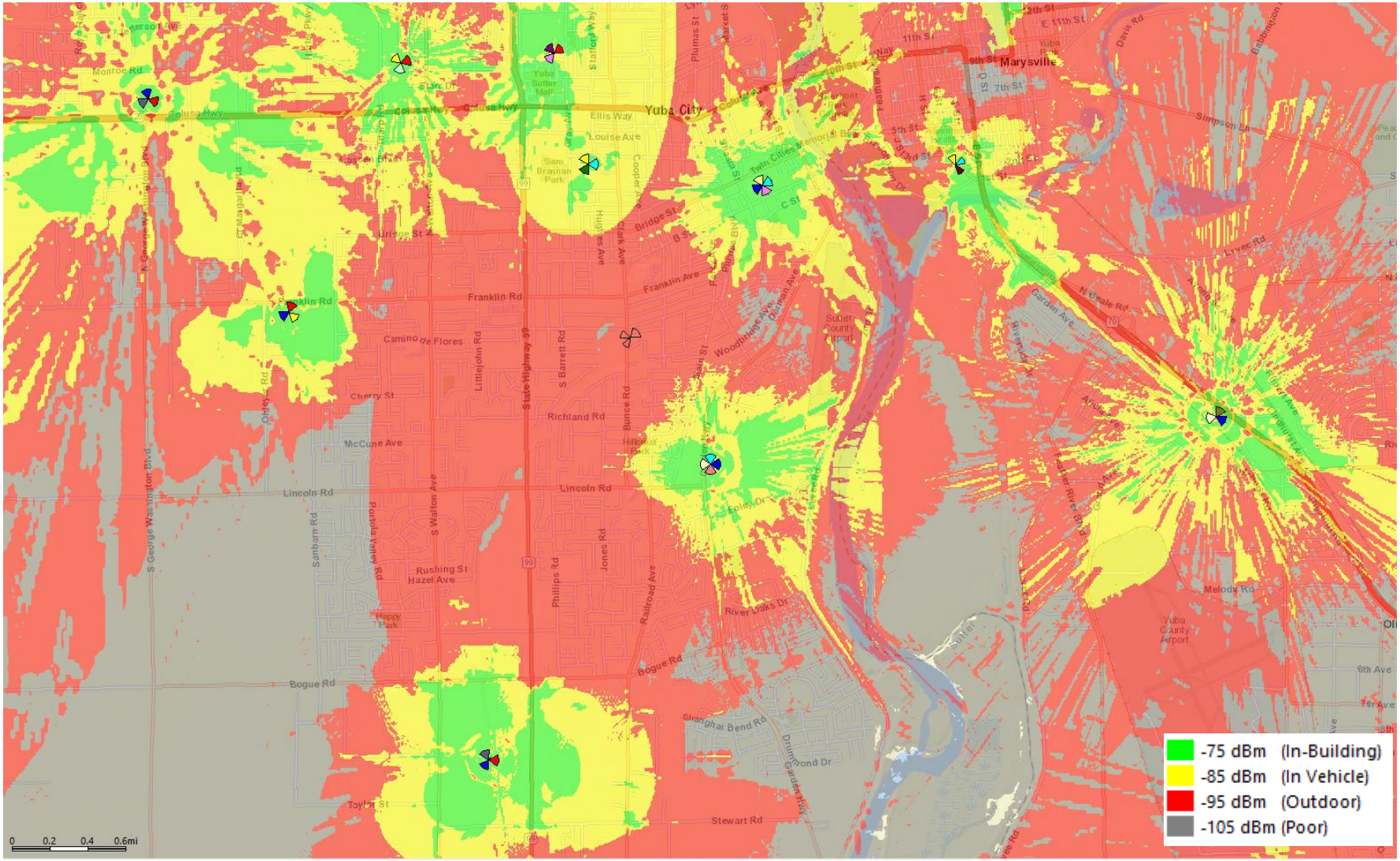

verizon

Confidential and proprietary materials for authorized Verizon personnel and outside agencies only. Use, disclosure or distribution of this material is not permitted to any unauthorized persons or third parties except by written agreement.

Predicted AWS Coverage With Honkers

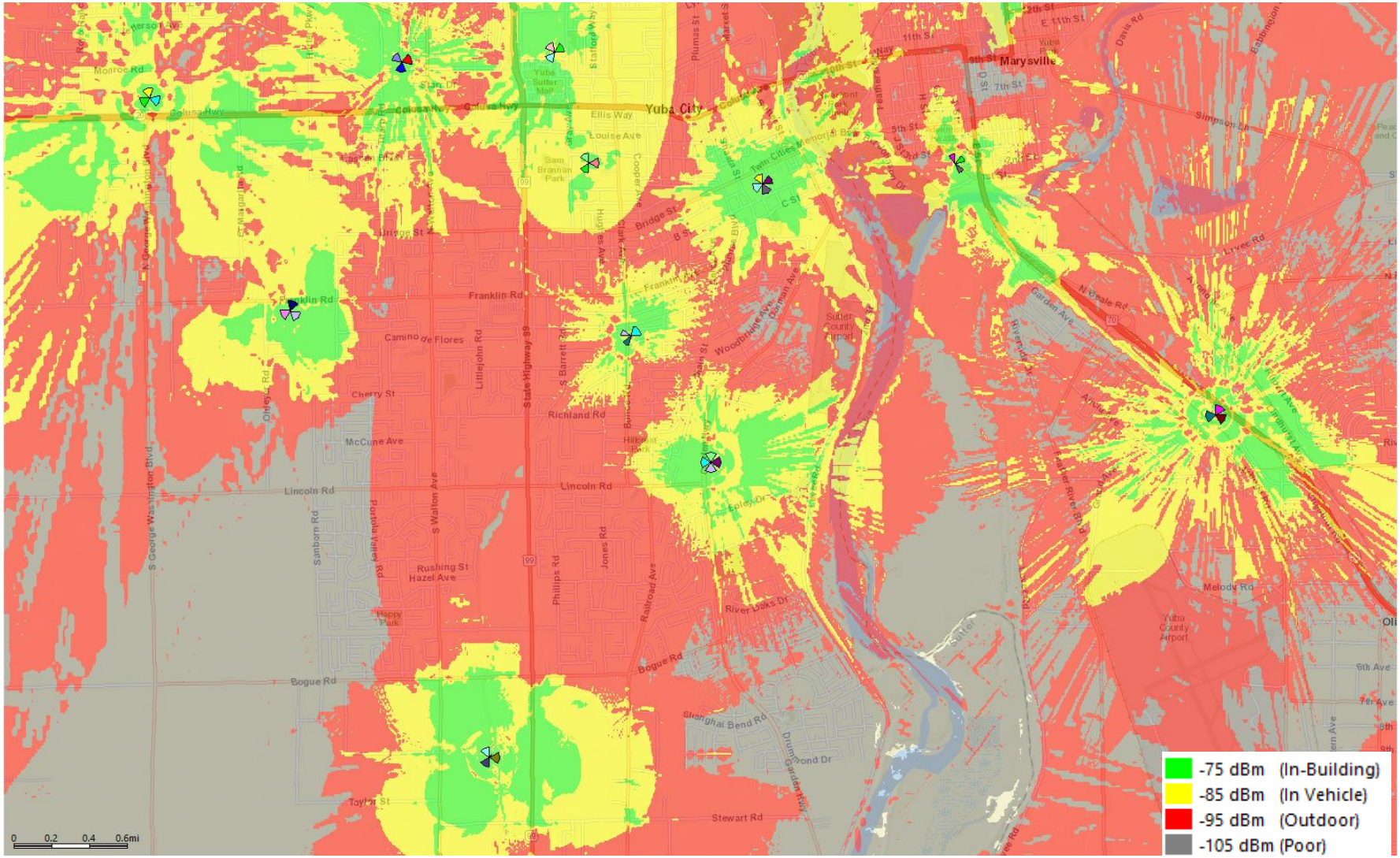

verizon

Confidential and proprietary materials for authorized Verizon personnel and outside agencies only. Use, disclosure or distribution of this material is not permitted to any unauthorized persons or third parties except by written agreement.

AWS Best Server With Honkers

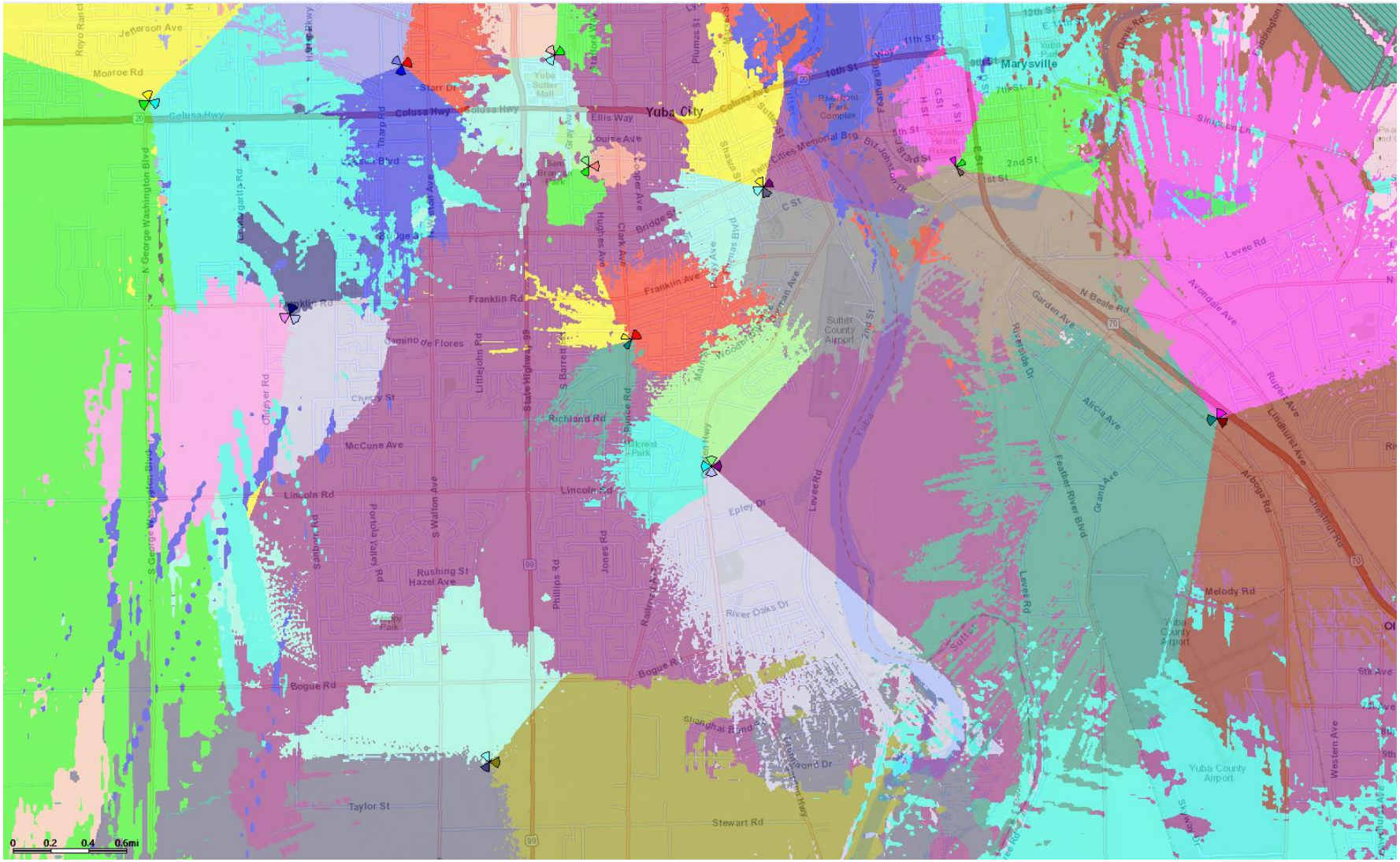

verizon

Confidential and proprietary materials for authorized Verizon personnel and outside agencies only. Use, disclosure or distribution of this material is not permitted to any unauthorized persons or third parties except by written agreement.

Existing AWS Best Server

verizon

Confidential and proprietary materials for authorized Verizon personnel and outside agencies only. Use, disclosure or distribution of this material is not permitted to any unauthorized persons or third parties except by written agreement.

ATTACHMENT 5

WATERFORD

7430 New Technology Way, Suite 150
Frederick, MD 21703
(703) 596-1022 Office
(540) 242-3195 Fax
www.waterfordconsultants.com

October 19, 2023

Epic Wireless Group
8700 Auburn Folsom Road, Suite 400
Granite Bay, CA 95746

Re: **Noise Assessment Letter**
223 Clark Avenue,
Yuba city, CA 95991

Honkers is a proposed Verizon telecommunications macro site located in the City of Yuba, CA. Verizon is proposing to add a pre-manufactured equipment cabinet with a door mounted heat exchanger and a new emergency backup generator. Based on our review of the project drawings and technical specifications, the following is a summary of our noise assessment of the proposed equipment.
"As City of Yuba does not have any Noise Regulation so considering its Neighboring Sutter County Noise Ordinance".

Per **County of Sutter Noise Limits.**

Article 21.5- Noise Control Chapter – 1500-21.5, Section 1500-21.5-050 Exterior Noise Standards

Table 1

Table 1500-21.5-1: Exterior Noise Standards		
Noise Level Description	Daytime (7:00 a.m. to 10:00p.m.)	Nighttime (10:00p.m. to 7:00 a.m.)
Hourly L_{eq}, dBA	55	45
Maximum Level, dBA	70	65

a) Exterior Noise Violation. It is unlawful for any person at any location within the County to create any noise which causes the noise levels on a noise sensitive receiving property, when measured in the designated exterior noise measurement location, to exceed the noise standards specified in Table 1500-21.5-1.
b) Impulsive, Simple and Pure Tone Noise. Each of the noise limits specified in Table 1500-21.5-1 shall be reduced by 5 dBA for recurring impulsive noise, simple or pure tone noise, or for noises consisting of speech or music.
c) Ambient Noise Level. Noise level standards, which are up to five 5 dBA less than those specified in Table 1500-21.5-1 may be imposed, based upon determination of existing low ambient noise levels in the vicinity of the receiving property.
d) Application. The exterior noise level standard shall be applied to the property line of the receiving property (as measured no more than one foot or as close as practicable inside the property line).

WATERFORD

7430 New Technology Way, Suite 150
Frederick, MD 21703
(703) 596-1022 Office
(540) 242-3195 Fax
www.waterfordconsultants.com

NOISE ANALYSIS

Of the supporting equipment planned for this project, Table 2 below presents the primary noise sources of concern.

Table 2 – Supporting Equipment Noise Data

Noise Source	Equipment Type	Make	Model	Size	Manufacturer's Published Noise Data (dBA)	Noise Data Reference Distance (ft)
A	Heat Exchanger	Charles Industries	6000W HX	--	65	5
B	Generator	Generac	SDC030	30 kW	66 [1]	23

[1] Sound pressure is based on Gen Set with Level 2 sound attenuated enclosure, full-load operating conditions.

Our review of the package did not reveal any other significant noise sources. The Equipment is proposed to be installed on private property behind an 8'-0" high CMU wall to East.

To properly present this assessment, our noise modeling has assumed following scenarios: 1) the generator is operating in the full load condition; 2) Ambient noise is not considered; 3) other existing on-site equipment creating noises are ignored and 4) fencing/landscaping currently on site is not taken into consideration.

The site and its adjacent properties are located within the City of Yuba, Neighboring Sutter County and the telecommunication site sits within **APN 53-174-001**. The nearest significant adjacent property line is located to the East (**APN 53-174-003**). The measurement of sound shall be taken from the nearest residential property line, towards the source of the sound, which equates to **20 ft** from the Cabinet A/C unit to property line and **18 ft** from the generator to property line. Measurements to the actual residences are at larger distances than calculated in this report.

Generator is for emergency backup during power failure conditions. Generator is exercised once a week for one half hour maximum during daytime hours only. A/C unit on the pre-manufactured cabinet can run continuously during day and nighttime. Noise levels measurements per Table 2, calculated to the property line of the nearest residence, is as follows:

Noise Source 'A' – Cabinet mounted A/C = 37.9 dBA
Noise Source 'B' – Generator = 51.3 dBA
Combined Sources = Total of 51.49 dBA

WATERFORD

7430 New Technology Way, Suite 150
Frederick, MD 21703
(703) 596-1022 Office
(540) 242-3195 Fax
www.waterfordconsultants.com

Based on **Neighboring Sutter County** Code of Ordinance, the anticipated noise level of the a/c equipment meets the noise standard nighttime levels of 45 dBA's; and the combined anticipated levels of the a/c equipment on the shelter plus the Generator meets the maximum standard daytime noise levels of 55 dBA's. As sound pressure levels attenuate with increasing distance from the sound source, noise levels, due to the supporting equipment at all remaining surrounding property lines, are anticipated to be less than the County's requirements, meeting the noise standards outlined in this report.

CONCLUSION

Based on the project documentation, our noise assessment indicates that the proposed Verizon Telecommunications Facility complies with requirements mandated by **Neighboring Sutter County** Code of Ordinance, at all adjacent property lines per stated noise metrics outlined in the requirements above. To avoid any misunderstanding, I hereby state that to the best of my knowledge, belief and professional judgment, this report represents an accurate appraisal of Verizon equipment, based upon careful evaluation of Manufacturer's data to the extent reasonably possible.

Please reach out if I can be of further assistance.

Respectfully Submitted
For the Firm

Digitally signed by Robert Lara
Date: 2023.10.19 21:36:56-04'00'

Robert J Lara,

ATTACHMENT 6

Environmental Assessment 23-09 for Monopole Cell Tower

Initial Study and Mitigated Negative Declaration for Use Permit 23-02

Please refer to the electronic version provided via email or at the link below:

www.yubacity.net/environmental

CITY OF YUBA CITY
PLANNING COMMISSION
STAFF REPORT

Date: December 13, 2023

To: Chairwoman and Members of the Planning Commission

From: Development Services Department

Presentation By: Doug Libby, Deputy Development Services Director

---

Summary

Subject: Zoning Code Amendment 23-01: Revise Section 8-5.6104 of the Yuba City Municipal Code regarding parking standards for boats, utility trailers and recreational vehicles in residential areas.

Recommendation: A. Conduct a Public Hearing; and

B. Adopt a Resolution of the Planning Commission of the City of Yuba City recommending the City Council find the project is exempt from environmental review pursuant to CEQA Guidelines Section 15061 (b)(3) and recommend the City Council approve Zoning Code Amendment 23-01 to revise the parking standards for boats, utility trailers and recreational vehicles in residential areas

Fiscal Impact: No direct fiscal impact will result from amending the Municipal Code to revise the standards discussed.

Applicant/Owner: City of Yuba City

Project Location: Applicable Citywide

Background:

Staff periodically brings forward recommended code revisions to incorporate statutory changes and other miscellaneous revisions for consideration to keep the Zoning Code contemporary for the City's needs.

Due to comments made by citizens to individual Council members and feedback to Code Enforcement, the parking of boats, trailers, and RVs was discussed at City Council workshops on January 26, 2023, and September 7, 2023. As a result of Council feedback, staff prepared draft Municipal Code revisions to generally allow the parking of a single boat, trailer, or recreational vehicle (RVs) within front yard areas of one and two-family residentially zoned areas when in compliance with specific standards.

On October 3, 2023, the City Council unanimously initiated a Municipal Code Amendment to revise the standards associated with the parking of boats, trailers and RVs within residential front yard areas.

Analysis:

The parking of boats, trailers and RVs within front yard areas within one and two-family (R-1 and R-2) zoning districts is not an uncommon sight within the city limits.

Currently, Section 8-5.6104 of the Yuba City Municipal Code requires these items be parked behind the front wall of the residence or, in the case of a corner lot, behind the wall of the residence facing each street right-of-way. Screening to a height of 6-feet from view of the public right-of-way is required. An exception is provided that recreational vehicles used as daily transportation may be parked overnight on recognized parking areas.

The question of "where" to allow parking for these items can be controversial as there are citizens passionate on both sides of this issue. Some citizens want the ability to keep a unit at home to reduce storage costs and have ready access to it. Others are equally passionate that units stored in front of homes within one and two-family residential areas result in a cluttered aesthetic that can reduce property values.

A draft ordinance (Attachment 2) has been prepared with proposed revisions establishing alternate standards providing for the following:

- Establish definitions for Recreational Vehicle and Utility Trailer.
- Establish standards providing for the parking of a single boat, trailer, or RV within a front yard area when in conformance with specific criteria. Additionally, there is a provision to park a second item on lots larger than 0.5 acre.
- If a property owner is unable to comply with the proposed criteria, they must comply with the City's existing standards of parking an item behind the front wall of a residence and providing screening to a height of 6-feet from view of the public right-of-way.
- Citizens having two items would be allowed to park one in the front yard consistent with the standards proposed and a second item behind the front wall of a residence and providing screening to a height of 6-feet from view of the public right-of-way, as they can today.

It is important to recognize the proposed revisions will not, in most cases, allow for the parking of large trailers, boats or RVs in driveways. Most homes constructed within the last 30-years or more have a 20± foot-deep front yard setback from the back of sidewalk to a home's attached garage. In this situation, the largest RV that could likely be parked in front of a residential garage is a unit that is approximately 15-16 feet in length. The remaining area will be occupied by the trailer frame, rear bumper, and hitch/tongue of the unit.

Large units will still be required to park within an adequately sized side yard/rear yard and be screened to City standards or stored offsite at an approved location.

Providing an opportunity to allow for the parking of boats, trailers, and RVs within residential front yard areas, when compliant with specific criteria that does not compromise public safety, could result in code enforcement being more effective because they will spend less time on this issue.

After consideration by the Planning Commission, the proposed ordinance will be brought back to the City Council, with the Planning Commission's recommendation where, if approved, the ordinance will need to be introduced at one meeting and adopted at a second City Council meeting. The ordinance will become effective 30 days following adoption.

As part of bringing this matter forward, a public hearing notice was advertised in the Appeal Democrat newspaper and mailed notice was provided to known persons who may have filed code enforcement complaints, as well as property owners who may be or have been in violation of the current ordinance requirements.

Environmental Determination:

After reviewing the California Environmental Quality Act (CEQA) and the Guidelines, staff believes this project is covered by the general rule specified at CEQA Guidelines Section 15061(b)(3) and has determined with certainty that there is no possibility the proposed update to the Municipal Code would cause a significant, adverse, effect on the environment. This is because the proposed revisions merely provide for refinements to existing allowed uses and for additional clarity regarding the standards for the parking of boats, utility trailers and recreational vehicles on residential property.

Additionally, this project can also be considered exempt from environmental review pursuant to CEQA Guidelines Section 15301, Existing Facilities. The proposed amendments to the standards for the parking of boats, trailers and RVs could potentially result in minor alterations to existing residences involving negligible or no expansion of the residential use at these existing residences. Additionally, none of the exceptions to this exemption as set forth in CEQA Guideline Section 15300.2 apply and the project does not present an "unusual Circumstance." .

Recommended Actions:

A. Conduct a Public Hearing; and

B. Adopt a Resolution of the Planning Commission of the City of Yuba City recommending the City Council find the project is exempt from environmental review pursuant to CEQA Guidelines Section 15061 (b)(3) and recommend the City Council approve Zoning Code Amendment 23-01 to revise the parking standards for boats, utility trailers and recreational vehicles in residential areas.

Attachments:

1. Resolution
2. Draft Ordinance
3. Public Comment Received

ATTACHMENT 1

PLANNING COMMISSION RESOLUTION NO. 23-28

RESOLUTION OF THE PLANNING COMMISSION OF THE CITY OF YUBA CITY RECOMMENDING THE CITY COUNCIL FIND PROJECT ZC 23-01 IS EXEMPT FROM ENVIRONMENTAL REVIEW PURSUANT TO CEQA GUIDELINES SECTION 15061(B)(3) AND RECOMMEND THE CITY COUNCIL APPROVE ZONING CODE AMENDMENT 23-01 TO REVISE THE PARKING STANDARDS FOR BOATS, UTILITY TRAILERS, AND RECREATION VEHICLES IN RESIDENTIAL AREAS

WHEREAS, on January 26, 2023, and September 7, 2023, the parking of boats, trailers, and RVs was discussed at City Council workshops. As a result of Council feedback, staff has prepared Municipal Code revisions to generally allow the parking of a single boat, trailer, or recreational vehicles (RVs) within front yard areas of one and two-family residentially zoned areas when in compliance with specific standards; and

WHEREAS, it would be beneficial to the City to revise the code to incorporate statutory changes and other miscellaneous revisions for consideration to keep the document contemporary for the City's needs; and

WHEREAS, on October 3, 2023, the City Council unanimously initiated a Municipal Code Amendment to revise the standards associated with the parking of boats, trailers and RVs within front yard areas of one and two family residentially zoned areas; and

WHEREAS, on December 13, 2023, the Planning Commission considered an amendment to the Yuba City Municipal Code to revise the parking standards for boats, utility trailers and recreational vehicles within front yard areas of one and two family residentially zoned areas ("proposed Ordinance"); and

WHEREAS, the Planning Commission held a duly noticed public hearing on December 13, 2023, to consider the update to the Yuba City Municipal Code initiated by the City Council of the City of Yuba City, including whether the project was subject to the California Environmental Quality Act (CEQA); and

WHEREAS, after considering all information provided, and providing an opportunity to the public to provide public testimony, the Planning Commission recommends the City Council adopt the proposed Ordinance and make an associated determination that the proposed Ordinance is exempt from CEQA pursuant to CEQA Guidelines, sections 15061(b)(3) and 15301

NOW, THEREFORE, BE IT RESOLVED by the Planning Commission of the City of Yuba City as follows:

1. Recitals: The Planning Commission hereby finds that all of the facts set forth in the recitals above are true and correct and incorporated herein.

2. CEQA Findings: The Planning Commission recommends the City Council find that the adoption of the proposed project is covered by the general rule specified at CEQA Guidelines Section 15061(b)(3) and has determined with certainty that there is no possibility the proposed amendment to the Municipal Code would cause a significant, adverse, effect on the environment. This is because the proposed revisions merely provide for refinements to existing allowed uses and for additional clarity regarding the standards for the parking of boats, utility trailers and recreational vehicles on residential property.

   Additionally, this project can also be considered exempt from environmental review pursuant to CEQA Guidelines Section 15301, Existing Facilities. The proposed amendments to the standards for the parking of boats, trailers and RVs could potentially result in minor alterations to existing residences involving negligible or no expansion of the residential use at these existing residences. Additionally, none of the exceptions to this exemption as set forth in CEQA Guideline Section 15300.2 apply and the project does not present an "unusual Circumstance."

3. General Plan Consistency. Pursuant to Municipal Code Section 8-57202(d), the Planning Commission finds the proposed amendment to the Zoning Code is consistent with the General Plan.

4. Public Benefit. The Planning Commission finds the proposed Ordinance will provide a public benefit.

5. No Detrimental Impact. The Planning Commission finds that the proposed Ordinance will not be detrimental, or cause adverse effects, to adjacent property owners, residents, or the general public.

6. Recommendation of Approval of the Ordinance. Based on the information provided above, the Planning Commission recommends that the City Council of Yuba City adopt the proposed Ordinance as set forth in Exhibit "A."

7. Effective Date of Resolution. This Resolution shall become effective immediately.

The foregoing Resolution was duly and regularly introduced, passed and adopted by the Planning Commission of the City of Yuba City at a regular meeting thereof held on December 13, 2023, by the following vote:

Ayes:

Noes:

Absent:

Recused:

By order of the Planning Commission of the City of Yuba City.

_____

Jackie Sillman, Planning Commission Chair

ATTEST:

_____

Benjamin Moody, Secretary to the Planning Commission

ATTACHMENT 2

ORDINANCE NO. ___

AN ORDINANCE OF THE CITY COUNCIL OF THE CITY OF YUBA CITY AMENDING REGULATIONS FOR THE PARKING OF BOATS, TRAILERS AND RECREATIONAL VEHICLES IN ONE AND TWO FAMILY RESIDENTIAL DISTRICTS

WHEREAS, the City of Yuba City has adopted standards in its Municipal Code for the parking of recreational vehicles in residential areas of the City; and

WHEREAS, the City of Yuba City desires to update these standards to better reflect the desires of the community and to assist code enforcement by having clear standards; and

WHEREAS, the City Council of the City of Yuba City discussed the parking of boats, utility trailers and recreational vehicles at public workshops on January 26, 2023 and September 7, 2023; and

WHEREAS, on October 3, 2023, the City Council of the City of Yuba City unanimously initiated an update to the Municipal Code to revise the standards applicable to the parking of boats, utility trailers and recreational vehicles within one and two-family residential districts;

WHEREAS, the City on December 2, 2023, published a legal notice in compliance with State law concerning the Planning Commission's consideration on December 13, 2023 and provided written notice to known persons to the City who have previously expressed an interest in this item; and

WHEREAS, the Planning Commission considered this ordinance at its meeting on December 13, 2023, and made a recommendation to the City Council.

NOW THEREFORE, the City Council of the City of Yuba City does ordain as follows:

SECTION 1. Recitals. The above recitals are incorporated by reference.

SECTION 2. CEQA. The City Council finds this project is covered by the general rule of California Environmental Quality Act (CEQA) Guidelines Section 15061(b)(3), and has determined with certainty that there is no possibility that the proposed update to the Municipal Code would cause a significant, adverse, effect on the environment. This is because the proposed update merely provides for refinements to existing allowed uses and for additional clarity regarding the standards for the parking of boats, utility trailers and recreational vehicles on residential property.

Additionally, this project can also be considered exempt from environmental review pursuant to CEQA Guidelines Section 15301, Existing Facilities. The proposed amendments to the standards for the parking of boats, trailers and RVs could potentially result in minor alterations to existing residences involving negligible or no expansion of the residential use at these existing residences. Additionally, none of the exceptions to this exemption as set forth in CEQA Guideline Section 15300.2 apply and the project does not present an "unusual Circumstance."

SECTION 3. Subsection (c) of Section 8-5.6104 of the Yuba City Municipal Code is amended to read in its entirety as follows:

(c) *One- and two-family residential standards.*

(1) *Parking in yards*. The parking of any vehicles is prohibited in any portion of a required front or street side yard, except on a driveway leading to required parking or to an improved parking space (see Section 8-5.6104(7)). Any driveway leading to a garage, carport or required parking space shall not be less than 20 ft. in length measured from the back of an existing or planned sidewalk.

(2) *Boat, utility trailer and recreational vehicle parking.* A boat, utility trailer and recreational vehicle may only be parked on the portions of a lot behind the front wall of the residence facing each street or right-of-way. The recreational vehicle shall be screened to a height of 6 ft. from view from any public right-of-way. A recreational vehicle used as daily transportation may be parked overnight on recognized parking areas.

(3) *Alternative standards.* As an alternative to the requirement of Section 8-5.6104(c)(2), a single trailered boat, utility trailer or recreational vehicle may be parked in the front yard of the residence only when in conformance with all of the following standards:

(i) The parking area shall be developed to a similar standard as the existing established driveway (i.e. concrete, asphalt concrete, pavers, or gravel). Strip driveways utilizing concrete, asphalt or pavers may be installed under each wheel from the edge of right-of-way to a designated parking area.

(ii) The parking area shall connect with the public right-of-way consistent with City standards under approval of an encroachment permit, if applicable.

(iii) New parking areas shall not result in stormwater runoff onto neighboring properties.

(iv) Parking areas shall not be located in front of an existing residence's living area and shall occur in front of an existing garage or front side yard area. The parking area shall be approximately perpendicular to the existing street and shall not be angled.

(v) A parked recreational vehicle, utility trailer or boat shall be setback a minimum of twelve (12) inches from the back of side walk or edge of the public right-of-way and shall not be artificially raised or angled in order to meet this requirement.

(vi) A parked recreational vehicle, utility trailer or boat shall not exceed twelve (12) feet in height.

(vii) Utility connections (electricity, water, wastewater) shall be temporary for servicing only (up to 7-days).

(viii) Covers shall be fitted and in good order and untorn; tarps are prohibited.

(ix) Parking areas shall be kept free of accumulation of leaves, cobwebs, weeds, or miscellaneous debris.

(x) Parking areas shall not create a site distance hazard to neighboring property owners or users of streets or sidewalks.

(xi) Parking areas shall be maintained so as not to create a public nuisance as defined by this Code.

(xii) On lots greater than 0.3 of an acre, alternative parking locations and surfacing may be approved by the Planning Director.

(xiii) On lots greater than 0.5 of an acre, a second recreational vehicle, utility trailer or boat may be stored within a front yard area and alternative parking locations and surfacing may be approved by the Planning Director.

(xiv) A fence screening a side or rear yard shall not be removed in order to accommodate a larger boat, utility trailer or recreational vehicle otherwise in conformance with these alternative standards.

SECTION 4. Section 8-5.8046.5 of Article 80 of Chapter 5 of Title 8 of the Yuba City Municipal Code is added to read in its entirety as follows:

Sec. 8-5.8046.5. Recreational Vehicle (RV).

A motor home, converted bus, travel trailer, truck camper or camping trailer, designed for temporary human habitation for recreation or emergency occupancy, which, when transported upon a public roadway, measures 8 feet or less in width and 40 feet or less in length and which is either self-propelled, truck-mounted or permanently towable on the highway without a permit. A recreational vehicle does not include utility trailers.

SECTION 5. Section 8-5.8063.5 of Article 80 of Chapter 5 of Title 8 of the Yuba City Municipal Code is added to read in its entirety as follows:

Sec. 8-5.8063.5. Trailer, Utility. A trailer used for the transportation of the user's personal property, commerce, or designed to be used for transportation of livestock, and does not exceed a gross weight of 10,000 pounds or a manufacturer's gross vehicle weight rating (GVWR) of 10,000 pounds.

SECTION 6. Severability. If any provision(s) of this Ordinance or the application thereof to any person or circumstances is held invalid or unconstitutional by any court of competent jurisdiction, such invalidity or unconstitutionality shall not affect any other provision or application, and to this end the provisions of this ordinance are declared to be severable. The City Council

hereby declares that they would have adopted this ordinance and each section, subsection, sentence, clause, phrase, part or portion thereof, irrespective of the fact that any one or more sections, subsections, clauses, phrases, parts or portions thereof be declared invalid or unconstitutional.

SECTION 7. Effective Date. This Ordinance shall be effective on the thirty-first day after its adoption.

This Ordinance was introduced on _____, and duly adopted by the City Council of the City of Yuba City at its duly noticed regular meeting _____, by the following vote:

AYES: Council Member(s):
NOES: Council Member(s):
ABSENT: Council Member(s):

_____
Shon Harris, Mayor
City of Yuba City

Attest:

_____
Ciara Wakefield, Deputy City Clerk
City of Yuba City

APPROVED AS TO FORM
COUNSEL FOR YUBA CITY

_____
Shannon Chaffin, City Attorney
Aleshire & Wynder, LLP

ATTACHMENT 3

November 3, 2023

City of Yuba City
Attn: Ben Moody, Director of Public Works, and Development Services
1201 Civic Center Blvd.
Yuba City, CA 95993

Re: Amending the City's Municipal code on RV, trailers, Boat Parking

This is in reference to the upcoming vote on amending the city's municipal code, which could revise regulations for placing boats, trailers, and RVs in the front yards of residential properties.

Revising this code could cause:

1. Neighborhoods residing in the City of Yuba City to become a cluttered mess.
2. Friction and grief between families that don't own large boats, RVs, or trailers, and between families that have spent thousands of dollars to make room at their homes with the current regulation in place (new fencing, concrete, etc.). If this amendment passes, and families did not need to spend the extra money, it would be unfair to the homeowner, and they should be compensated. In our opinion, this amendment, if passed, would be so disrespectful to our neighbors/neighborhoods.
3. As Mr. Libby stated in the proposed amendment to the code, "you have people passionate who believe that the parking of such units in a front yard creates clutter and a negative aesthetic look in the area and could potentially reduce property values". This statement is true as having a setback requirement of only 1 foot away from the sidewalk will create turmoil in the neighborhood.

Why can't the regulation state that a homeowner that is purchasing a large recreational vehicle or boat show proof to the City or to the DMV when registering it that they have a place to store it, either a rented space or behind a fence at home. I know this is impossible, but just a suggestion.

Personally, we purchased a travel trailer, spent thousands of dollars ($8,000 to be exact) to install a metal gate, pour concrete to move a shed back to accommodate our trailer to make it legal to store on the side of our home. There is currently a large vessel that blocks the view of our surrounding neighborhood. Although covered, it is still an eyesore. Amending and approving the code will only make our city look horrific, as not all trailers/boats will be stored in front of their homes in a respectful manner not only to their home but to their neighbors and the neighborhood.

During the last flood scare, we evacuated to Lincoln. The City of Lincoln had an ordinance that no one can be parked on the street in the residential area we stayed in after a certain nighttime hour. We all received parking tickets that, after petitioning at the courthouse, were excused due to the circumstances. This ordinance in place truly makes the city look clean and beautiful.

Please vote *NO* and leave the amendment to the city's municipal code as is and enforce the law that all offenders store their boats/RVs/Trailers behind a fence or at a offsite storage facility.

Thank you for allowing me to share my opinion against this upcoming vote.

https://www.appeal-democrat.com/news/yuba-city-addresses-rv-boat-parking-ordinance-lease-financing-approved-by-city-council-for-heavy/article_34eab1d2-6313-11ee-9f0e-1b8808492d7e.html

Yuba City addresses RV, boat parking ordinance; Lease financing approved by city council for heavy equipment vehicles

By Michaela Harris / mharris@appealdemocrat.com
Oct 4, 2023

The Yuba City City Council unanimously approved Tuesday action to initiate an amendment to the city's municipal code, which could revise regulations for placing boats, trailers and RVs on the front yards of residential properties.

Seeing these types of vehicles in front yards or driveways is not uncommon in Yuba City. By amending the city's existing ordinance, officials hope to establish clear parking standards and make code enforcement more efficient and effective.

Currently, Yuba City's municipal code requires that boats, trailers and RVs be parked behind a front wall of a residential property that is at least 6 feet tall. An exception to this rule is RVs that are regularly used for daily transportation can be parked overnight in recognized parking areas.

This topic was previously discussed at city council workshops in January and September this year, Deputy Director of Development Services Doug Libby said. Since then, city staff have prepared draft revisions of the municipal code to allow parking for a single boat, trailer or RV within a front yard area.

"The question of where to allow parking for these items can be controversial because there are people passionate about either side. You have those who want the flexibility to be able to park their unit in their front yard to reduce storage costs and have ready access to it. You also have people equally passionate who believe that the parking of such units in a front yard creates clutter and a negative aesthetic look in the area and could potentially reduce property values," Libby said.

Proposed revisions include developing parking areas to a similar standard as existing driveways. New driveway connections with the public street or right-of-way would be required to meet the city's standards and have an encroachment permit, Libby said.

Parking areas would also take place in front of an existing garage or front side yard area. Parked RVs, trailers and boats would have a setback requirement of at least 1 foot away from the public sidewalk or right-of-way.

Moving forward, city staff will draft an ordinance to be considered by the Planning Commission at a public hearing before being brought back to council. Separate meetings will be held to introduce the ordinance and later vote to adopt it.

Lease financing

As Yuba City continues to replace its fleet of aging vehicles, the Yuba City City Council unanimously approved a $1 million lease financing agreement with JPMorgan Chase Bank to purchase two dump trucks and an all-terrain fire vehicle.

According to Finance Director Spencer Morrison, this purchase was authorized as part of the city's 2023/24 operating budget. City staff received a quote from PB Loader Corporation for a total net price of $388,796 for two dump truck vehicles, which will arrive between four to six months of purchase. In addition, the city estimates that the total cost to purchase and equip an all-terrain fire engine will be around $515,000.

In order to facilitate 10-year lease financing for these vehicles, financial planning company NHA Advisors helped the city establish a competitive bid process and determined that JPMorgan had the best offer with a locked, fixed 3.99% interest rate.

This bid is based on the city utilizing a make-whole call option for the financing, meaning that should city officials elect to prepay the equipment lease financing, the prepayment price would be a function of both the remaining payments and the market interest rates.

City staff are hoping to purchase a BME Targhee standard fire engine, which is currently unavailable due to labor shortages and manufacturing issues. Morrison said that the city will hold funds for a new fire engine in escrow in case a suitable model becomes available.

"Because it's a line of credit, if we don't end up making the purchase of this engine, then the money will either go back to the bank or we might be able to utilize it to pay down the debt," Morrison said.

This financing agreement will give Yuba City a maximum annual debt of $121,260 per year if officials spend the whole loan amount. During the 10-year term of the lease schedule, the total interest paid will be approximately $228,000, the city said.